www.fine-tek.com

Optical Level Switch

FineTek

Innovation · Quality · Sharing

INTRODUCTION

WORKING PRINCIPLE

The optical liquid level switch uses the principle of total reflection in a prism. Reflection or penetration, is the basis of the level alarm output. When the sensor is surrounded by air, the angle of incidence is greater than the critical angle and thus total reflection occurs.

Totally reflected light will be transmitted to the receiver. Conversely, when the sensor is surrounded by liquid, due to the refractive index of the liquid and the sensor tip material, almost all light will penetrate the front of the sensor. Using this principle, the optical liquid level switch design is based on light. The receiver can detect and determine a light reflected or penetrated state, and determines the circuit output.

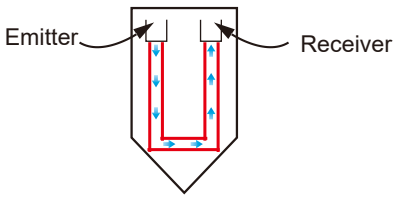

In the air

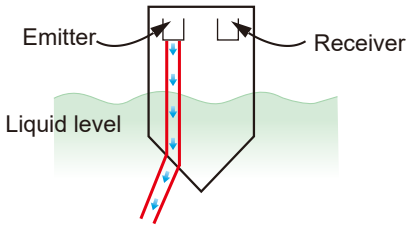

In the liquid

FEATURES

- Simple, compact, and robust
- No moving parts
- Built-in, solid-state electronics
- Easily removed, cleaned, and reinstalled
- LED switch indication

APPLICATIONS

- Pharmaceutical systems
- Air conditioning systems
- Industrial compressors
- Food and beverage systems
- Hydraulic reservoirs
- Machine tools
- Liquid holding tanks
- Processing and packaging equipment
- Heavy duty automotive
- Sumps

SDX201 SPECIFICATION

Type	Cable type	M12 connection type
Tip material	Glass	
Body material	SUS304 / SUS316	
Supply voltage	10 ~ 28 VDC	
Load current	≦200 mA	
Current consumption	< 25 mA	
Output mode	NPN / PNP	
Output function	NO+NC	
Electrical protection	reverse polarity protection, short circuit protection	
Delay time	0 sec (Standard) / 5 sec ±1 sec (optional)	
Ambient temp.	-20~80 °C	
Operation temp.	-20~100 °C	
Process pressure	< 60 bar	
Anti-ambient light interference	< 500 lux	
IP rating	IP 67	
Indicator light	Red LED	N/A
Cable specifications	PVC or XLPE 24 AWG, L=2 m, 4C (blue, green, black, and brown)	N/A
Max. Installation torque	75 kgf-cm	
Thread options	PT / PF / NPT	
Connection size	3/8" / 1/2"	
UL File Number	E324746	
Dimension (Unit:mm)	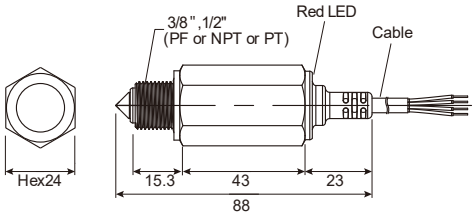	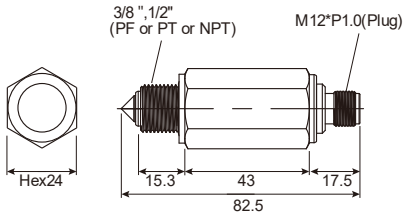

※Low-pressure injection molded. Minor bubbles or irregularities are normal and do not affect performance.

ORDER INFORMATION

Glass Probe

⑦ ⑧ ⑨ ⑩ ⑪ ⑫ ⑬ ⑭ ⑮ ⑯ ⑰ ⑱ ⑲ ⑳ ㉑ ㉒ ㉓ ㉔ ㉕

SDX 2 0 1 □□-□□□□□□□□□□□□□□□□□□□□□□□□□

⑦⑧ Certification

00：None
3A：UL

Connection

⑨⑩

AA：JIS
AC：ANSI

⑪⑫

A4：3/8"
A5：1/2"

⑬⑭

01：PT male
03：PF male
07：NPT male

⑮⑯ Body and Probe material

MA: Glass+SUS304
MB: Glass+SUS316

⑰ Power supply

A：10~28Vdc

⑱ Output

P：PNP
N：NPN

⑲ Wiring

A: Cable
B: M12

⑳ Delay time

A：No delay time
B：High delay of 5 seconds
C: Low delay of 5 seconds

㉑ Turbidity

A: Standard
B: Turbid

㉒㉓㉔㉕ Length

Code	Cable Length
0000	None
2000	Standard 2000mm

SD22 SPECIFICATION

Type	Typical	Motor power detection
Tip material	Glass	
	Zinc-plated steel / SUS304 / SUS316	
Body material	PA66 glass fiber reinforced	
Supply voltage	AC 50/60 Hz 115 V ±20%; AC 50/60 Hz 230 V ±20%	
Relay specifications	AC 240 V, 2.5 A, C300	
Switch life time	105 switching cycles	
Ambient temp.	-40 ~ 85 °C	
Operating temp.	-40 ~ 100 °C or 120°C (<1h)	
Delay time (customization)	* Relay ON after applying the supply voltage (3s ± 1s) * Relay OFF after level continue missing (5s ± 1s)	* Relay ON after applying the supply voltage (3s ± 1s) * Level monitoring after relay ON (30s ± 1s) * Relay OFF after level continue missing (5s ± 1s)
Self-test function	Yes	
Process pressure	65 bar	
Anti-ambient light interference	< 500 lux	
IP rating	IP 65	
Cable specifications	PVC, 18 AWG, L=1m, 5C color coded	PVC, 18 AWG, L=1m, 6C color coded
Installation torque	100 kgf-cm	
Connecting screw	1/2" (PT, PF, NPT) / M20X1.5 mm	
Tip part weight	Around 51 g	
Body part weight	around 167 g	
UL File Number	SA44153	
Dimension (Unit:mm)	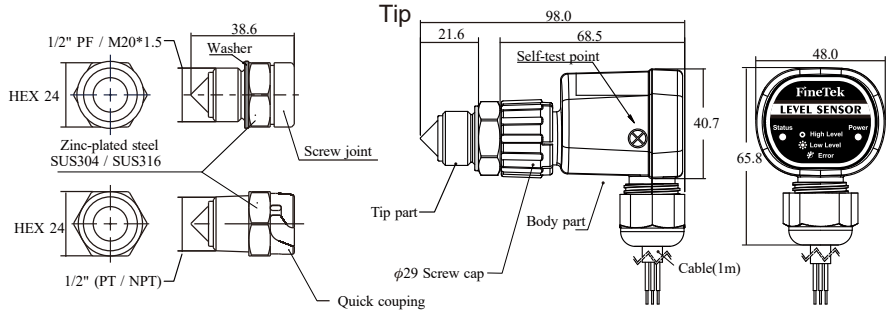	

SD22 SERIES

APPLICATION

- SD22 uses optical technology to achieve level monitoring and is durable to shocks in the environment.
- Uniquely different design (2 separate parts) compared to the traditional optical switch model.
- SD 22's switch body can be removed while the tip remains installed on tank. No tank drainage or leakage required when removing switch.
- Intelligent process control for not only do liquid level detection,but also with other sensors connected in series so that the full system has protection.
- According to customer demand, adjustable delay time length.
- Self-test function.
- The device is able to detect whether sensor body and tip are installed incorrectly.
- The LED indicator is readily apparent users to see.
- Quick coupling provide faster installation and reliable fix.

	Color	Status	LED lights
Power	Green	Supply in	ON
Status	Red	High level	OFF
		Low level	ON
		Error	Blinking

WIRING DIAGRAM

◆SDB-B0□T□ (5 wire, typical)

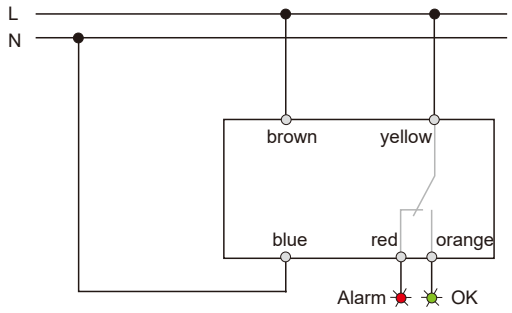

◆SDB-B0□M□ (6 wire, motor power detection)

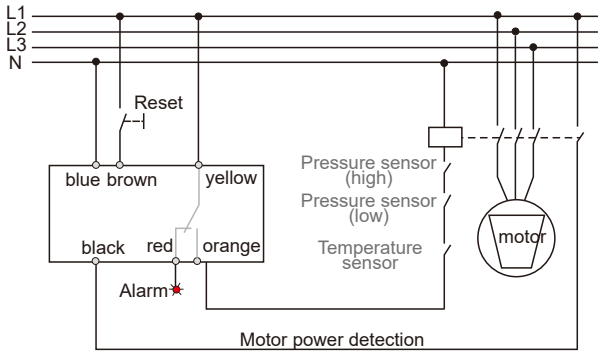

WORKING FLOW

◆SDB-B0□T□ (5 wire,typical)

1. Three seconds after the power is turned on, the relay is on.
2. Liquid level detection, level required sustained low 5 seconds, the relay OFF andstatus light turns on.
3. Liquid level detection, level requires continuous contact for five seconds, the relay turns on, the status light turns off.

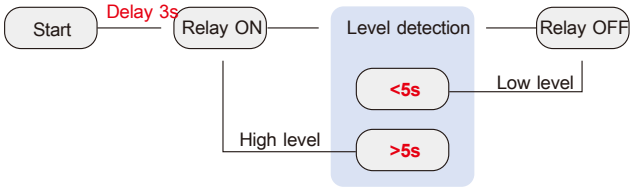

◆SDB-B0□M□ (6 wire,motor power detection)

1. Three seconds after the power is turned on, the relay turns ON.
2. Detects the motor power supply is normal after a delay of 30 seconds to enter the liquid level detection state.
3. Liquid level detection, level required sustained low for 5 seconds, the relay turns off and ststus light is turned on lit, enters the Locked state.
4. Need to restart the power to cancel the alarm state and re-start the process.

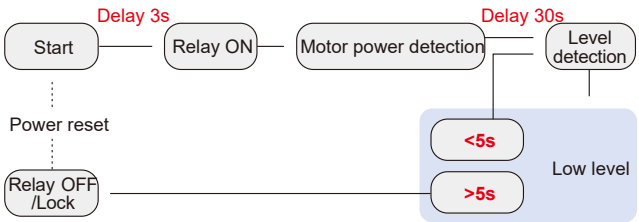

ORDER INFORMATION

Tip

Order code	Connector of tip and body	Connector type	Power supply
Options	A: Crew joint (F) N: Quick coupling (F)	T: Typical (5 wire) M: Motor power detection (6 wire)	AC115V±20% AC230V±20%
SDXAA1X-0016	A: Crew joint (F)	T: Typical (5 wire)	AC230V±20%
SDXAA1X-0009	A: Crew joint (F)	M: Motor power detection (6 wire)	AC115V±20%
SDXAA1X-0010	A: Crew joint (F)	M: Motor power detection (6 wire)	AC230V±20%
SDXAA1X-0013	N: Quick coupling (F)	T: Typical (5 wire)	AC115V±20%
SDXAA1X-0014	N: Quick coupling (F)	T: Typical (5 wire)	AC230V±20%
SDXAA1X-0011	N: Quick coupling (F)	M: Motor power detection (6 wire)	AC115V±20%
SDXAA1X-0012	N: Quick coupling (F)	M: Motor power detection (6 wire)	AC230V±20%

Body

Order code	Connector of tip and body	Connector type	Tip material
Options	A: Crew joint (F) N: Quick coupling (F)	BQ:1/2"PT BR:1/2"PF BU:1/2"NPT M2:M20X1.5	0: SUS304 6: SUS316 Z: Zinc-plated steel
SDXAM1A-MAA5030001	A: Crew joint (F)	BR:1/2"PF	0: SUS304
SDXAM1A-MAA5070001	A: Crew joint (F)	BU:1/2"NPT	0: SUS304
SDXAM1A-MPJ2820001	A: Crew joint (F)	M2:M20X1.5	Z: Zinc-plated steel
SDXAM1A-MAA5010001	N: Quick coupling (F)	BQ:1/2"PT	0: SUS304
SDXAM1A-MAA5030002	N: Quick coupling (F)	BR:1/2"PF	0: SUS304
SDXAM1A-MPA5030001	N: Quick coupling (F)	BR:1/2"PF	Z: Zinc-plated steel
SDXAM1A-MAA5070002	N: Quick coupling (F)	BU:1/2"NPT	0: SUS304

ORDER INFORMATION

Refrigeration-glass Probe

⑦⑧ ⑨⑩⑪⑫⑬⑭⑮⑯⑰⑱⑲⑳㉑㉒㉓㉔

SDX4 0 0 □□-□□□□□□□□□□□□□□□□

⑦⑧ Certification

00：None
3A：UL

Connection

⑨⑩

AA：JIS
AC：ANSI

⑪⑫

A5：1/2"
J2：M20

⑬⑭

01：PT male
03：PF male
07：NPT male
B2: M20 X1.5

⑮⑯ Body and Probe material

MA：Glass+SUS304
MB：Glass+SUS316
ME：Glass+SUS Zinc +Plated steel

⑰ Power supply

A：VAC 115V
B：VAC 230V

⑱ Output

R：Relay

⑲ Function

T：Typical (5 wire)
M：Motor power detection (6 wire)

⑳ Connector of tip and body

A: Crew joint (F)
B: Quick coupling (F)
C: Crew joint (Glass welding)

㉑㉒㉓㉔ Length

Code	Cable Length
1000	Standard 1000mm

SDX5 SPECIFICATION

Housing material	PC	PES
Tip material	PC	PES
Supply voltage	10~28 VDC	
Load current	≤100 mA	
Current consumption	<15 mA	
Output mode	NPN / PNP	
Output function	NO / NC	
Electrical protection	reverse polarity protection, short circuit protection	
Ambient temp.	-10~80 °C	
Operation temp.	-10~125 °C	
Process pressure	<10 kg / cm^2	
IP rating	IP 67	
Indicator light	Red LED	
Cable specifications	PVC or XLPE, 24 AWG, L=2 m, 3C (Brown, Black, and Blue)	
Max. Installation torque	25 kgf-cm	50 kgf-cm
Thread options	M12x1.0 / M12x1.5	PF / NPT
Connection size	M12	3/8"
UL File Number	E324746	
Dimension (Unit:mm)	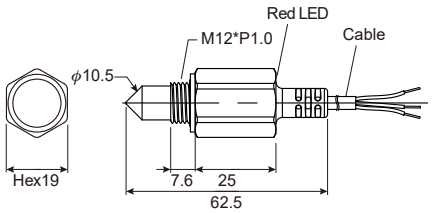	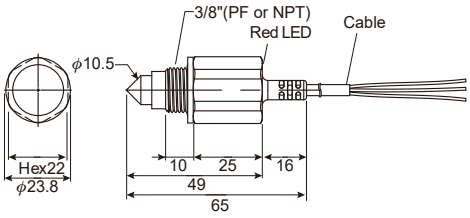

※PES (polyethersulfone) is similar PSU(polysulfone), but its heat resistance, strength, and stiffness is better.

※Low-pressure injection molded. Minor bubbles or irregularities are normal and do not affect performance.

SDX5 SPECIFICATION

Housing material	SUS304 / SUS316
Tip material	PES
Supply voltage	10~28 VDC
Load current	≤100 mA
Current consumption	<15 mA
Output mode	NPN / PNP
Output function	NO / NC
Electrical protection	reverse polarity protection, short circuit protection
Ambient temp.	-10~80 °C
Operation temp.	-10~125 °C
Process pressure	<40 kg / cm^2
IP rating	IP 67
Indicator light	Red LED
Cable specifications	PVC or XLPE, 24 AWG, L=2 m, 3C (Brown, Black, and Blue)
Max. Installation torque	100 kgf-cm
Thread options	PT/PF / NPT
Connection size	3/8 "
UL File Number	E324746
Dimension **(Unit:mm)**	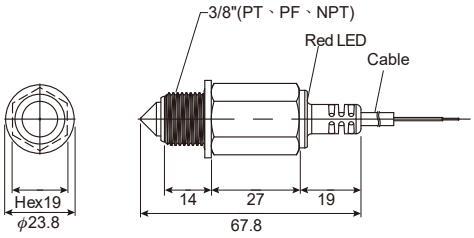

※PES(polyethersulfone) is similar PSU(polysulfone), but its heat resistance, strength, and stiffness is better.

※Low-pressure injection molded. Minor bubbles or irregularities are normal and do not affect performance.

SDX5 SERIES

FEATURE

- NPN, PNP open collector output to energize relay or PLC
- Housing material of PC, PES for applicable in water, oil, liquid solution, liquor, alcohol, organic solvent...etc.
- PC, PES for acidity and alkaline
- Over-current and reverse polarity protected
- LED status indication

WIRING

※Do not operate without load. Use the correct power supply according to the load.

- **Lead wire**

NPN output

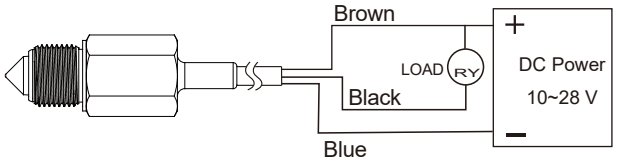

PNP output

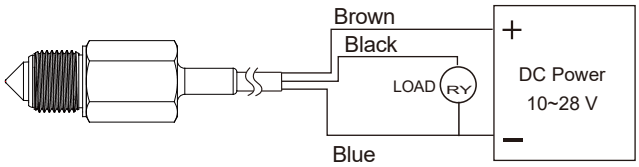

ORDER INFORMATION

Plastic probe

SDX5 ⑤⑥⑦⑧-⑨⑩⑪⑫⑬⑭⑮⑯⑰⑱⑲⑳㉑㉒㉓㉔

⑤⑥ Model

00：Standard

⑦⑧ Certification

00：None
3A：UL

Connection

⑨⑩
AA：JIS
AC：ANSI

⑪⑫
A4: 3/8"
I3: M12

⑬⑭
01: PT male(Only SUS304,316)
03: PF male
07: NPT male
78: M12X1.0(Only PC,PES)
82: M12X1.5(Only SUS304,316)

⑮⑯ Body and Probe material

11：PC (Only PC body material)
35：PES (Only PES body material)
MA：SUS304+PES
MB：SUS316+PES

⑰ Power supply

A：10~28Vdc

⑱ Output

P：PNP
N：NPN

⑲ Wiring

A：Cable

⑳ Contact

A：NO
B：NC

㉑㉒㉓㉔ Length

Code	Cable Length
0000	None
2000	Standard 2000mm

SDX501 SPECIFICATION

Housing material	PES	SUS304、SUS316
Tip material	PES	PES
Supply voltage	5VDC ± 10%; 12VDC ± 10%	
Current consumption	Max. 10 mA	
Output Type and Load Current	3-wire PNP，Source 40mA max.	
	3-wire NPN，Sink 40mA max. , up to 30VDC	
Output function	NO / NC	
Electrical protection	Reverse polarity protection; ESD protection on input and output terminals.	
Ambient temp.	-40 ~ 80°C	
Operation temp.	-40 ~ 110°C	
Process pressure	Max. 17kg/cm^2	
IP rating	IP 67	
Indicator light	Red LED indicates NC output status.	N / A
Cable specifications	3 x TPE Insulated，22AWG， L:152mm，Wire colors: Red, Black, Blue	
Connection size	1/2"-20 UNF-2A, 1/4" NPT, M12x1.0	
Dimension (Unit:mm)	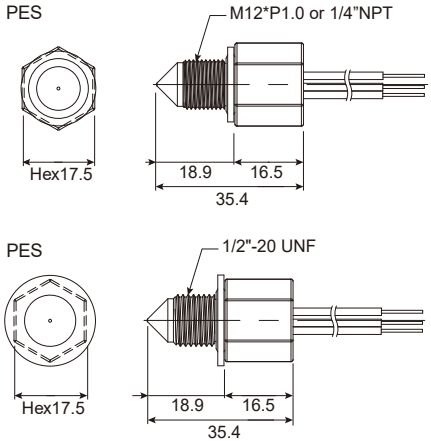	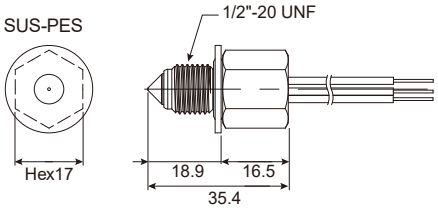

※PES(polyethersulfone) is similar PSU(polysulfone), but its heat resistance, strength, and stiffness is better.

※Low-pressure injection molded. Minor bubbles or irregularities are normal and do not affect performance.

ORDER INFORMATION

Plastic probe

⑦⑧ ⑨⑩⑪⑫⑬⑭⑮⑯⑰⑱ ⑳㉑㉒㉓㉔

SDX5 0 1 □□-□□□□□□□□□□A□□□□□

⑦⑧ Certification

00：None
3A：UL

Connection

⑨⑩	⑪⑫	⑬⑭
AA：JIS	A2: 1/4"	07: NPT male
AC：ANSI	A5: 1/2"	15: UNF male
	I3: M12	78: M12X1.0

※Connection options (select according to the combinations below)

1/2" -20 UNF-2A	: AA	A5	15
1/4" NPT	: AC	A2	07
M12	: AA	I3	78

⑮⑯ Body and Probe material

35：PES
MA：SUS304+PES
MB：SUS316+PES

⑰ Power supply

C：5VDC±10%
D：12VDC±10%

⑱ Output

P：PNP
N：NPN

⑳ Contact

A：NO
B：NC

㉑㉒㉓㉔ Length

Code	Cable Length
0152	Standard 152mm

Cable: 3 × TPE insulated wires
Wire color definition:
Red – Power (+) Black – Power (–) Blue – Switching output

CAUTION

- Cable wiring to be done in accordance with the operating manual connection.
- The manual tightening torque between the probe and the body may vary depending on the series and model. Please refer to the corresponding specifications.
- During installation note that the cable outlet direction is downward.
- This product is not for solids in solution, solids containing adhesion of suspended or viscous liquids.
- Do not scratch the tip of sensor.
- This product can not be used in the environment with an infrared light source.
- We recommend the following installation below. The horizontal plane parallel to the 0° ~ 45° for optimal installation angle.

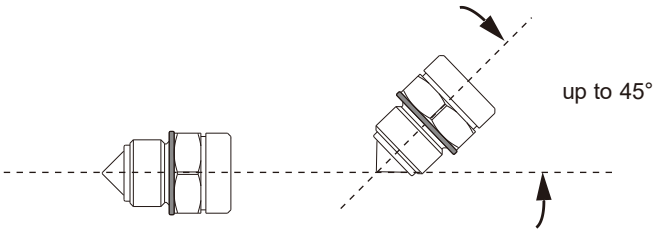

- This product can not be installed in the liquid at the flow entry point.
- Don't have any reflective surface or other interference at the front cone radius 30mm, as shown.
- The tip of optical level switches front of the sensor and the tank wall must be at least distance 30mm, as shown.

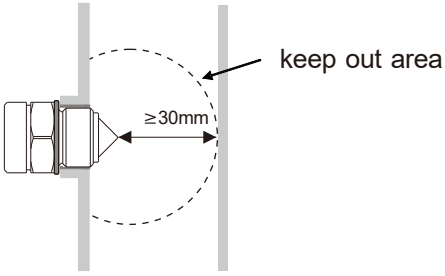

- Install the threaded sleeve photoelectric switch, the tip of switch must break the casing.

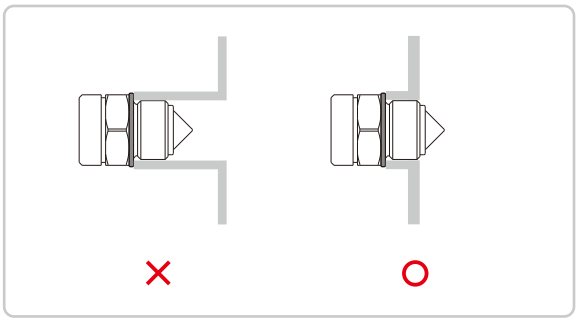

APPLICATIONS

Sea water cooling system

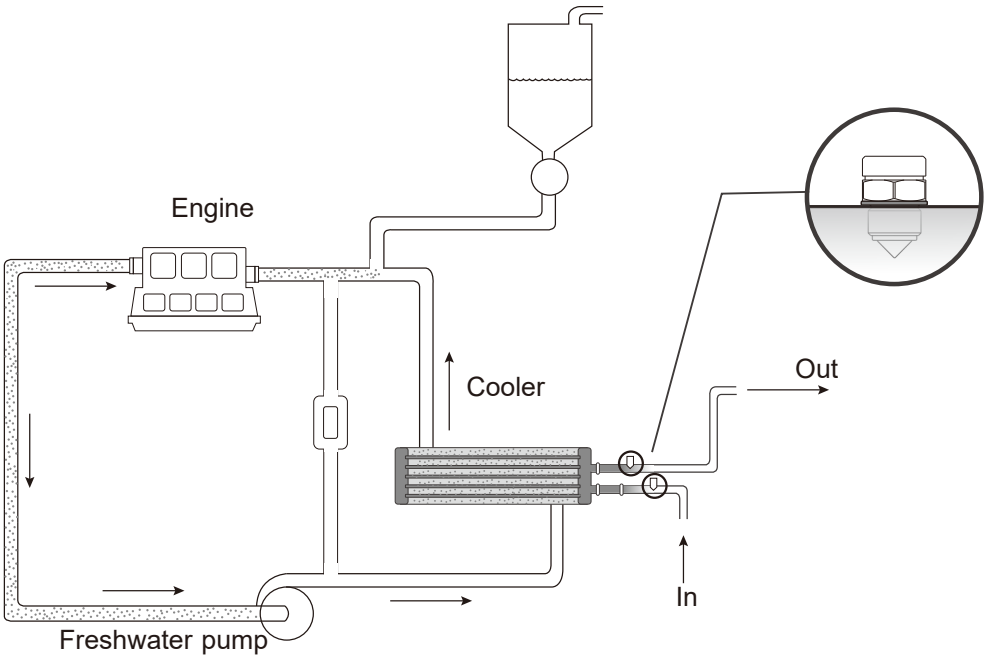

Double-wall pipe and double-wall tank leakage detection

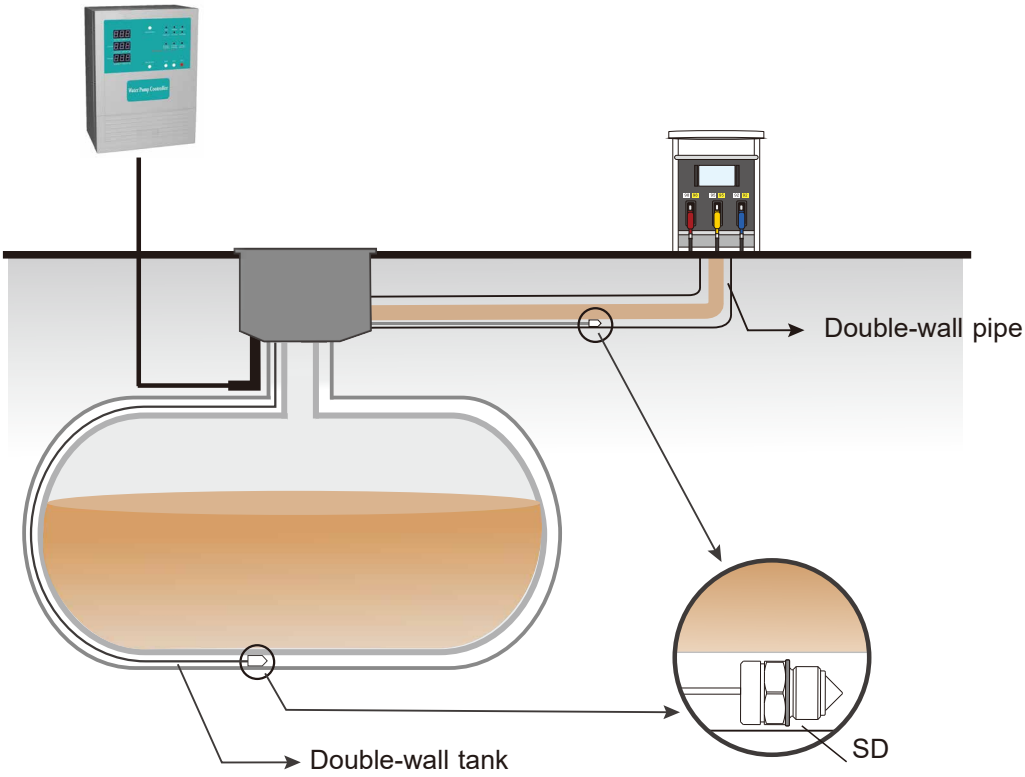

APPENDIX

M12 Cable list

Item	Part number	Connector type	Length	IP rating	SDX201
1	PCL10100-67AA232204C5000	Straight	5m	IP67	V
2	PCL10000-67AA232204C5000	Right Angle	5m	IP67	V
3	PCL10000-67AA232204C2000	Right Angle	2m	IP67	V
4	PCL10100-67AA232204C2000	Straight	2m	IP67	V
5	PCL10100-67AA232204C5000	Straight	5m	IP67	V
6	PCL10100-67AA232204CA100	Straight	10m	IP67	V

Global Network

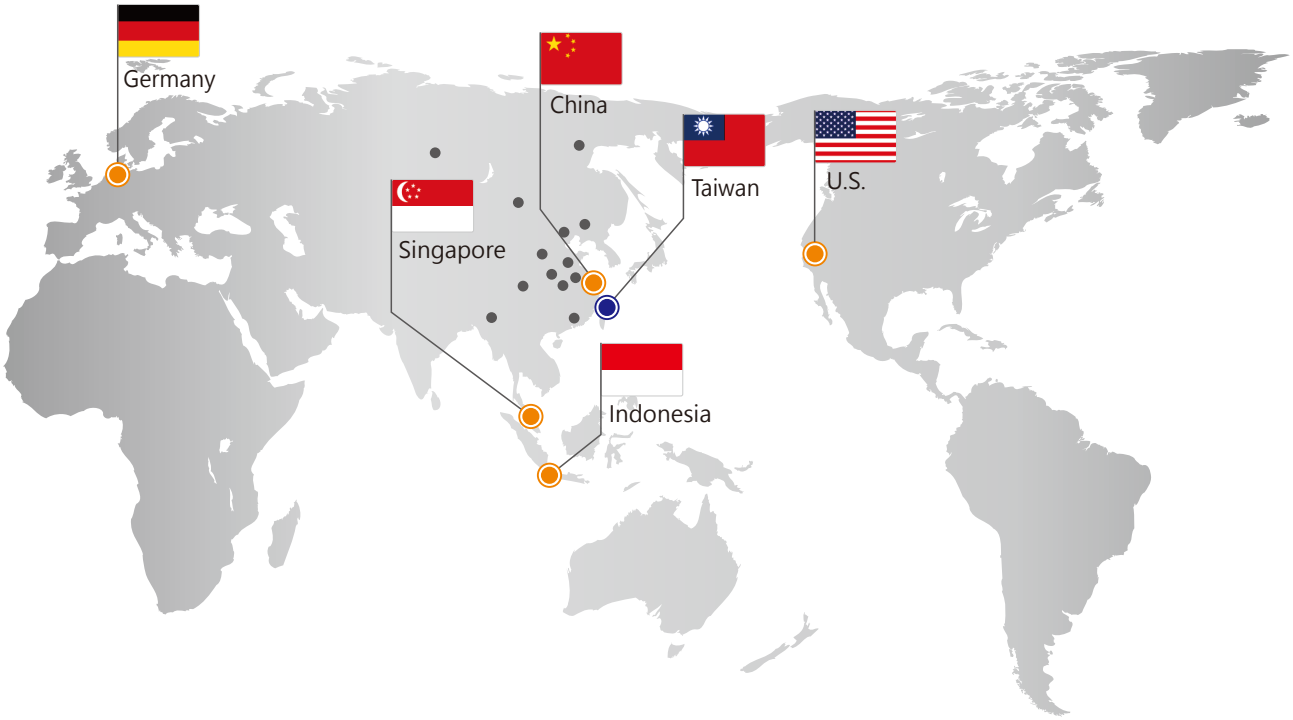

Head Quarter

Taiwan

FineTek Co., Ltd. - Taipei Head Quarter
No.16, Tzuchiang St., Tucheng Industrial Park
New Taipei City 236, Taiwan
TEL: 886-2-2269-6789
FAX: 886-2-2268-6682
EMAIL: info@fine-tek.com

Asia

China

Fine automation Co., Ltd. - Shanghai Factory
No.451 DuHui Rd, MinHang District, Shanghai,
China 201109
TEL: 86-21-6490-7260
EMAIL: info.sh@fine-tek.com

Singapore

FineTek Pte Ltd. - Singapore Office
37 Kaki Bukit Place, Level 4 Singapore 416215
TEL: 65-6452-6340
EMAIL: info.sg@fine-tek.com

Indonesia

PT. FineTek Automation Indonesia - Indonesia Office
PERGUDANGAN TUNAS BITUNG
JL. Raya Serang KM. 13,8, Blok C3 No. 12&15,
Bitung Cikupa, Tangerang 15710
TEL: 62 (021)-2958-1688
EMAIL: info.id@fine-tek.com

North America

California, U.S.

Aplus Finetek Sensor Inc. - US Office
355 S. Lemon Ave, Suite D
Walnut, CA 91789
TEL: 1 909 598 2488
FAX: 1 909 598 3188
EMAIL: info@aplusfine.com

Europe

Germany

FineTek GmbH - Germany Office
Bei den Kämpen 26
21220 Seevetal-Ramelsloh, Germany
TEL: +49-(0)4185-8083-12
FAX: +49-(0)4185-8083-80
EMAIL: info@fine-tek.de

Mütec Instruments GmbH - Germany Office
Bei den Kämpen 26
21220 Seevetal-Ramelsloh, Germany
TEL: +49-(0)4185-8083-0
FAX: +49-(0)4185-8083-80
EMAIL: muetec@muetec.de

FineTek

Distributor:

08-SDXEP-032426