www.fine-tek.com

Thermal Dispersion & Paddle Type Flow Switch

FineTek

Innovation · Quality · Sharing

PRODUCT INTRODUCTION

OPERATING PRINCIPLE

Thermal dispersion flow switches measure the velocity of a liquid inside a pipe or channel. The switch' s probe contains two key components – a heating sensor and temperature sensor. The heating sensor is positioned closest to the flowing liquid and provides a consistent heat. The temperature sensor measures the temperature emitted from the heating sensor.

When liquid is flowing, there is a temperature difference between the two sensors. The temperature difference has a proportional to the flow velocity (fast flowing liquids will result in greater heat differences and vice versa). Since the device contains no moving parts, has no wear and tear and maintains a long lifespan.

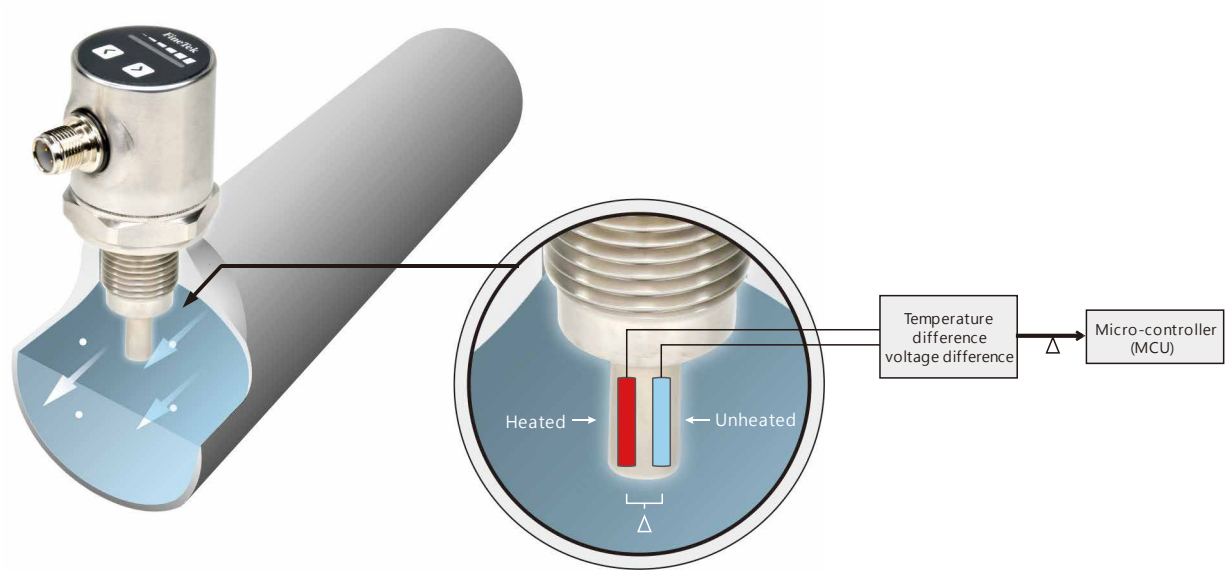

FEATURES

- High sensitivity and accuracy.
- Suitable for corrosive and hazardous conditions.
- Able to be calibrated for liquids with different densities and impurities.
- Suitable for complex locations with easy installation.
- Customized probe lengths available.

  Three different output signals options.

APPLICATION

Petrochemicals, Hydroelectric plants, Shipyard, HVAC Systems, Steel Industry Food and Beverage, Pharmaceutical, Optics and Semiconductor Industry, Cooling pipes flow control Any pipes carrying liquid where flow measurement is needed.

PRODUCT SPECIFICATIONS

Dimension(s) (Unit: mm)	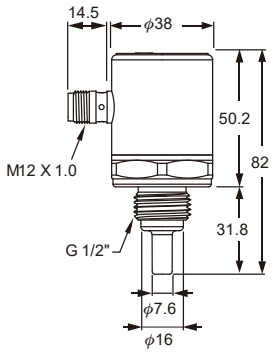	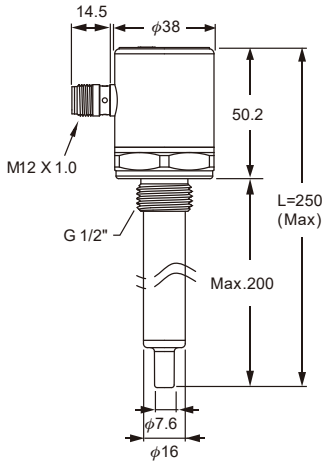	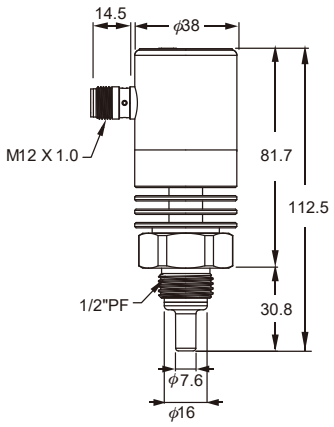
Model	SPX2 Standard model	SPX2 Extension model	SPX2 High temp. model
Measuring range	Water: 1~150 cm/s		
Ambient temp.	-20 ~ 80°C		
Process temp.	-20 ~ 85°C		-20 ~ 120°C
Alarm output	Open Collector : NPN / PNP(<250mA) Relay : 1A/30Vdc, 0.3A/125Vac (NO or NC)		
Operating pressure	100 bar (max.)		
Led indication	Flow velocity below set point- Red LED on, Open Flow velocity equals set point- Yellow LED on, Close Flow velocity above set point- Green LED to indicate flow speed, Close		
Housing	SUS304		
Wetted part	SUS304		
Protection level	IP67		
Warm-up time	Approx.15 Sec		
Connection thread	G1/2		
Operating voltage	19 ~ 36Vdc		
Power consumption	150mA (max.at 24Vdc)		
Electric connection	M12-4Pin Connector		

Dimension(s) (Unit: mm)	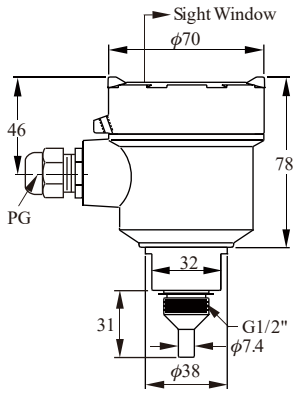	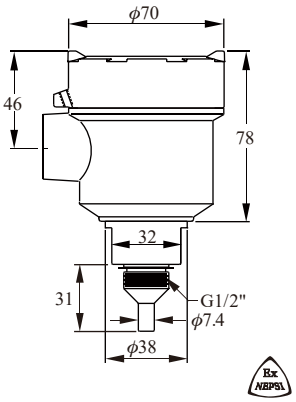	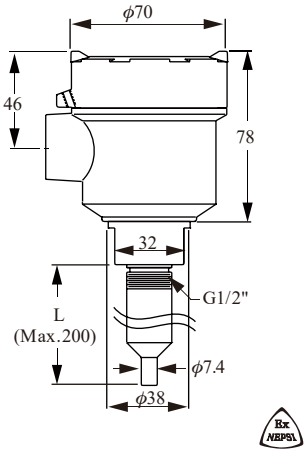
Model	SPX1 Stainless steel model	SPX1(SP170) Explosion proof model	SPX1 (SP171)Explosion-proof extension model
Measuring range	Water: 1~150 cm/s Oil: 3~300 cm/s		
Switching point	Flow velocity ≦ 50cm/s @25℃,Water		
Ambient temp.	-20 ~ 80℃	-20 ~ 60℃	
Process temp.	-20 ~ 80℃		
Alarm output	Relay: 5A/250Vac	Relay: 3A/250Vac	
Operating pressure	100 bar (max.)		
Led indication	Flow velocity below set point- Red LED on, Open Flow velocity equals set point- Yellow LED on, Close Flow velocity above set point- 4 Green LED to indicate flow speed, Close		
Housing	SUS304		
Wetted part	SUS304 / 316 / 316L		
Protection level	IP67		
Warm-up time	Approx.15 Sec		
Connection thread	G1/2, NPT1/2		
Operating voltage	19 ~ 30Vdc		
Power consumption	60 mA (max.)		
Electric connection	5-wire Relay Output Power- red Grounding- black COM- white NC- yellow NO- blue		
Accessory	Gasket	———————	———————

OPTIONAL ACCESSORIES

M12 ELECTRICAL CABLE CONNECTOR

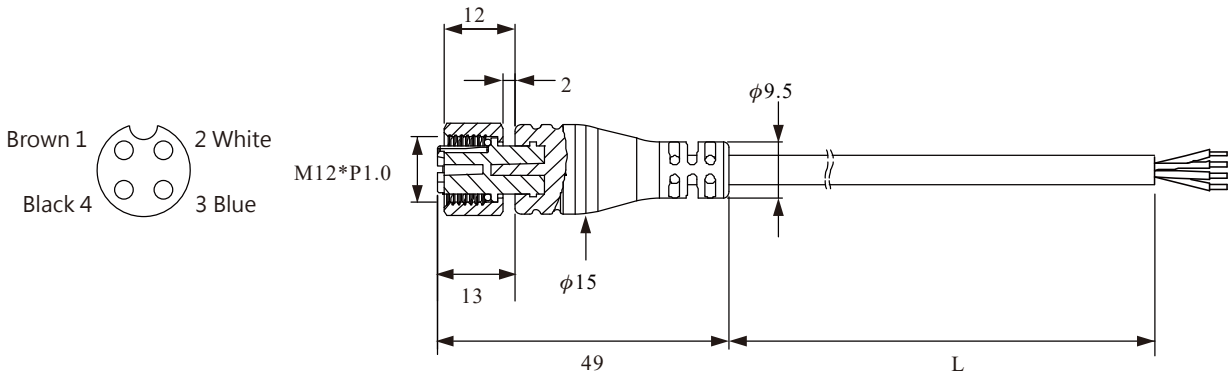

STANDARD SPECIFICATIONS

Order Code	Cable length	Voltage rating	Current rating	Protection grade
PCL10100-67AA232204C2000	2m	Max. 250Vac	Max. 4A	IP67
PCL10100-67AA232204C5000	5m			
PCL10100-67AA232204CA100	10m			

INSTALLATION

INSTALLATION

1. Use the water-proof gasket provided
2. The distance "a" should be at least four times the pipe diameter.(Fig. 1)
3. The pipe is bubble free for proper functioning. (Fig. 2)
4. For not-completely-filled pipes, install from the bottom. The liquid level needs to be higher than the probe height. (Fig. 3)
4. Must secure the mounting is firmly locked to avoid the danger of liquid leakage from the pipe. To ensure the optimal sensitivity and response time, it should be installed in the direction as shown in Figure 4.
5. Installing a filter upstream can decrease liquid impurities which can reduce wear and tear on the switch.

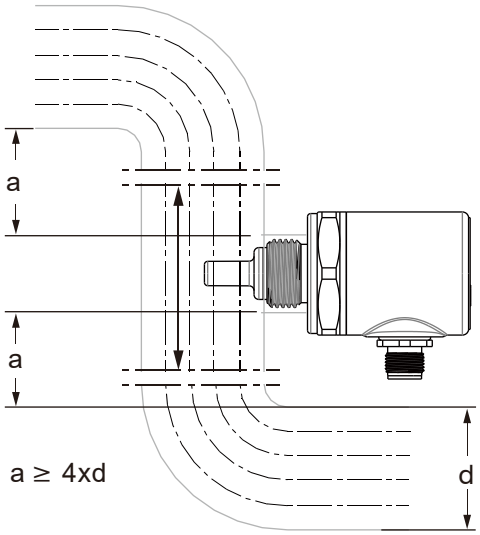

Fig. 1

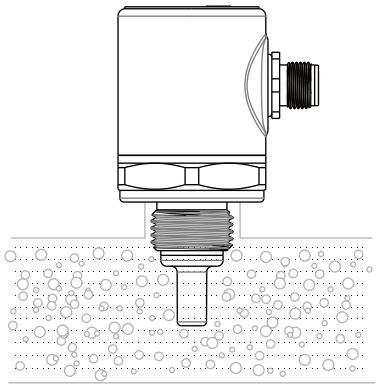

Fig. 2

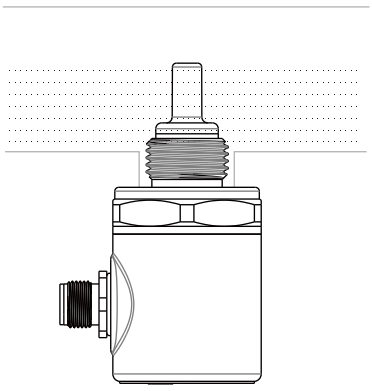

Fig. 3

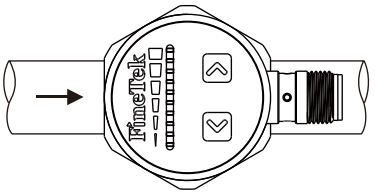

Fig. 4

WIRING AND CONNECTIONS

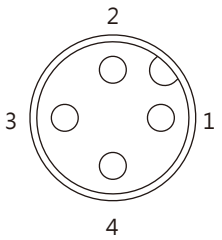

Fig. 5
Wire terminal diagram
(NPN, PNP and 1A relay output type)

SCREW TABLE

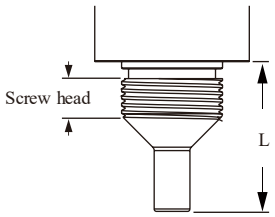

SPX1 Standard

Screw	PF,BSP		PT,NPT	
	Screw head	L	Screw head	L
1/2″	10.5mm	31mm	19mm	40mm
1″	16mm	36mm	20mm	40mm

SPX1 Extension

Screw	PF,BSP		PT,NPT	
	Screw head		Screw head	
1/2″	11.5mm	16mm	16mm	20mm
1″	16mm		20mm	

SPX2 Standard/Extension

Screw	PF
	Screw head
1/2″	10.5mm

WIRING

3-wire

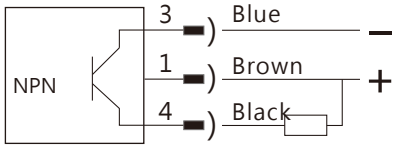

Fig. 6, SPX2 NPN output type wiring

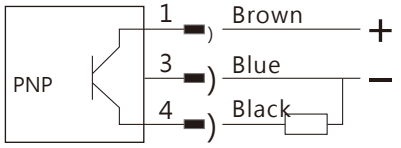

Fig. 7, SPX2 PNP output type wiring

5-wire

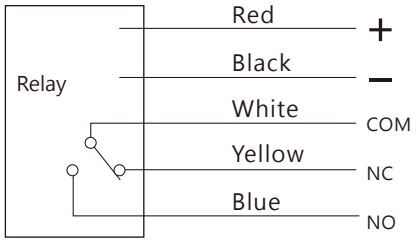

Fig. 8, SPX1 Relay output type wiring

4-wire

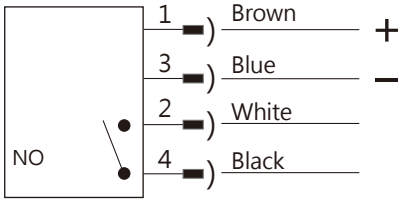

Fig. 9, SPX2 Relay output type wiring (NO)

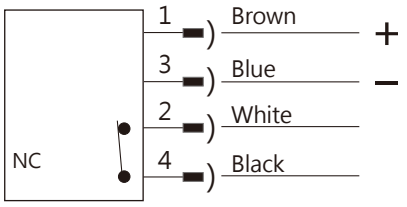

Fig. 10, SPX2 Relay output type wiring (NC)

ORDER INFORMATION

⑤⑥⑦⑧ ⑨⑩⑪⑫⑬⑭⑮⑯⑰⑱⑲⑳㉑㉒

SPX2 □□□□-□□□□□□□□□□□□□□□□

⑤⑥Model number

00: Standard type
02: Hi-temperature type

⑦⑧ Certification

00: None

⑨ Housing dimensions

E: Diameter ϕ38mm, cylindrical (Standard Type)
F: Diameter ϕ38mm, cylindrical (Extended Type)

Connection

⑩⑪	⑫⑬	⑭⑮
Thread item AA: JIS AB: ISO	A5: 1/2"	03: PF male

⑯⑰ Wetted material

MA: SUS304

⑱ Output

A: NPN
B: PNP
C: Relay (NO)
D: Relay (NC)

⑲⑳㉑㉒ Length(unit:mm)

Code range	Length range
0031	31.5mm Standard type
0032~0200	32~200mm Extended type

ORDER INFORMATION

⑤⑥ ⑦ ⑧ ⑨ ⑩ ⑪ ⑫ ⑬ ⑭ ⑮ ⑯ ⑰ ⑱ ⑲ ⑳ ㉑ ㉒

SPX1 □□□□-□□□□□□□□□□□□□□

⑤⑥ Model

00: Standard

⑦⑧ Certification

00: None
7C: NEPSI-Exd

⑨ Construction

C: Stainless steel type
D: Stainless steel extension type

Connection

⑩⑪	⑫⑬	⑭⑮
Thread item	A5: 1/2"	03: PF male
AA: JIS	A7: 3/4"	07: NPT male
AC: ANSI	A8: 1"	

⑯⑰ Material

MA: SUS 304
MB: SUS 316
MC: SUS 316L

⑱ Output signal

E: SPDT 3A/5A, 250Vac(Only stainless steel type)

⑲⑳㉑㉒ Length

Code	Length range
0031	Standard length 31mm(1/2″ PF/BSP)
0040	Standard length 40mm (1/2″ PT/NPT)
0025~0200	Extended type 25~200mm，The minimum length is based on the pitch

PADDLE TYPE FLOW SWITCH

PRINCIPLE

Flow switch can detect liquid movement in pipes. When the liquid is static or nonexistent, the spring is fully extended pulling the magnet downward and opening the switch.

As flow occurs and the paddle is thrusted forward 20~30° (or more) the paddle will push the magnet upward and actuate the switch (closing the circuit)

The length of paddle can be adjusted to the pipe's diameter.

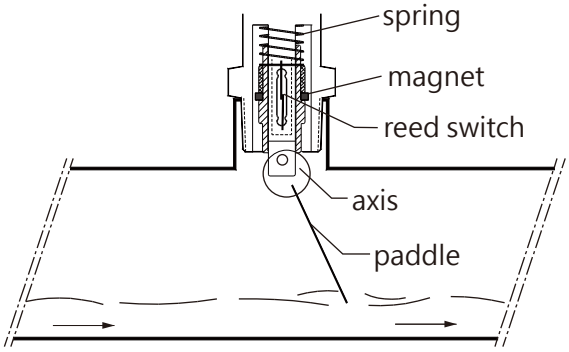

Switch on in case of liquid flowing in pipes

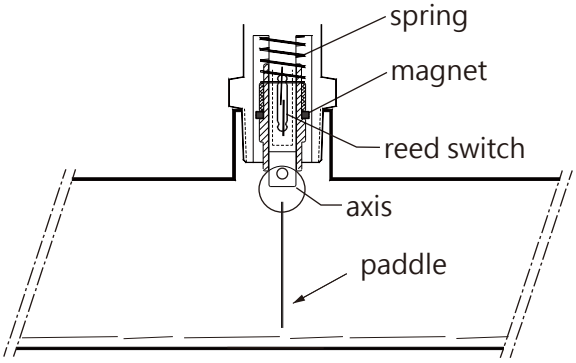

Switch off in case of no moving liquid in pipes

SECTIONAL DRAWINGS

1. O-Ring
2. Paddle
3. Axis
4. Reed switch
5. Spring
6. Magnet
7. Housing
8. Screw
9. Center rod

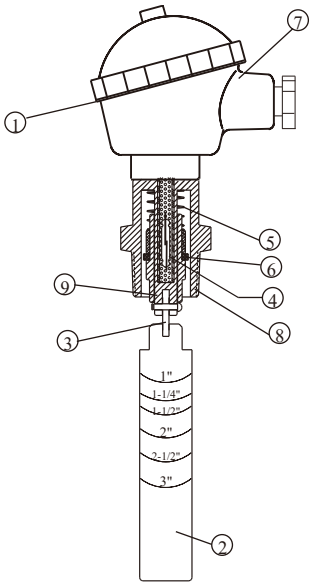

PRODUCT SPECIFICATIONS

Drawings	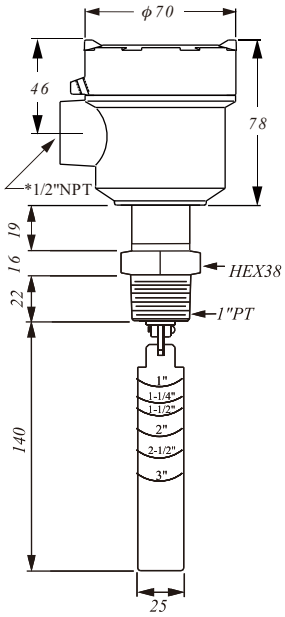	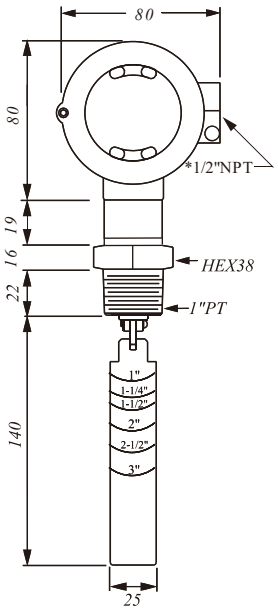	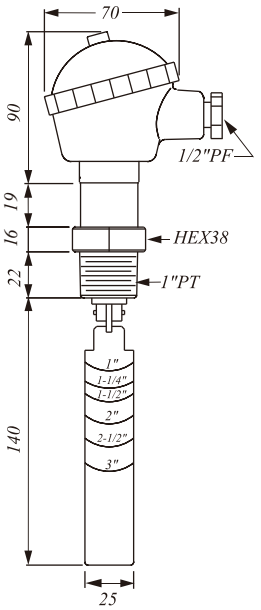
Model	SF1710		SF1800
	Explosion-Proof type	Enhance type	Standard type
Housing material	Stainless steel, IP65	Aluminum Alloy, Ex d	Aluminum Alloy, IP65
Process temp.	-30 ~ 130℃	-30 ~ 150℃	-30 ~ 150℃
Wetted material	SUS304		
Operation pressure	Max.355 PSIG		
Pressure drop allowance	3 PSIG		
Set point tolerance	±25%		
Repeatability tolerance	±5%		
Contact capacity	1A,40W 230Vac / 30Vdc SPDT	1A,60W 220Vac / 200Vdc SPDT	
Certification	NEPSI Ex d IIC T4~T6 Gb	N/A	

* Optional part

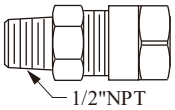

FLOW CONTROL RANGE TABLE

Flow Volume / Paddle Length (Gallon/Min.)	1"		1-1/2"		2"		2-1/2"		3"	
	Act.	De-Act.	Act.	De-Act.	Act.	De-Act.	Act.	De-Act.	Act.	De-Act.
1"	4.7	3.9	10.9	8.3	19.9	16.1				
1-1/4"			7.7	6.1	16.5	12.3	31.3	22.8		
1-1/2"			5.7	4.5	13.4	9.5	25.2	18.5		
2"					8.4	6.3	15.1	12.8	29.7	21.9
2-1/2"							13.9	10	20.4	15.4
3"									17.1	12.8

※ 1 Gallon=3.7854 Litter

INSTALLATION

1. The paddle length is dependent on the lowest paddle point to actuate the switch. Cut the paddle at appropriate pipe size mark or wherever desired. The minimum is 1".
2. The paddle must be at a right angle to the direction of flow
3. The FLOW mark on the screw must be parallel to the pipe.
4. Before installing the unit to a tee pipe, apply thread seal tape to the screw and then tighten.

CAUTION

1. The pressure and temperature ranges as shown in the catalog, must not be exceeded and also take the abrupt pressure and temperature into considerations.
2. Large sudden changes in liquid temperature and density (specific gravity) changes will influence the flow switch accuracy
3. Although highly rigid and durable, shock and vibration should be minimized.
4. Excessive fluid debris might inhibit paddle operation. Occasionally remove switch and clean off any debris.
5. Sealing electrical connections and the connection will reduce moisture damage.

● Not recommended for 1" or smaller NPT plastic pipes.

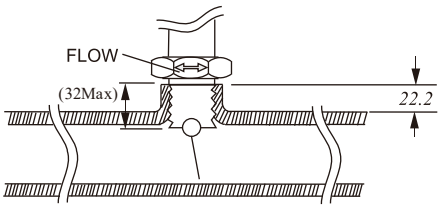

MODEL NUMBER / ORDER CODE COMPARISON TABLE / ORDER INFORMATION

Model Number	Order Code
SF1800	SFX10000-A1EAAA801
SF1710	SFX10000-A1LAAA801
	SFX1007C-A1NAAA801

⑦⑧ ⑪ ⑫ ⑬ ⑭ ⑮ ⑯ ⑰ ⑱ ⑲ ⑳

SFX1 0 0 □□-A1 □□□□□□□□□□

⑦⑧ Certification

00: None
7C: NEPSI-Ex d

⑪ Housing

Code	Description
E	Aluminum, IP 65, Only code for "00" on certification column.
L	Aluminum, Ex d, Only code for "00" on certification column.
N	Stainless steel 316, 1/2"NPT

Connection

⑫⑬

Thread
AA: JIS
AC: ANSI

⑭⑮

A8: 1"

⑯⑰

01: PT male
07: NPT male

⑱⑲ Material

MA: SUS 304
MB: SUS 316

⑳ Paddle length

X: Standard

Global Network

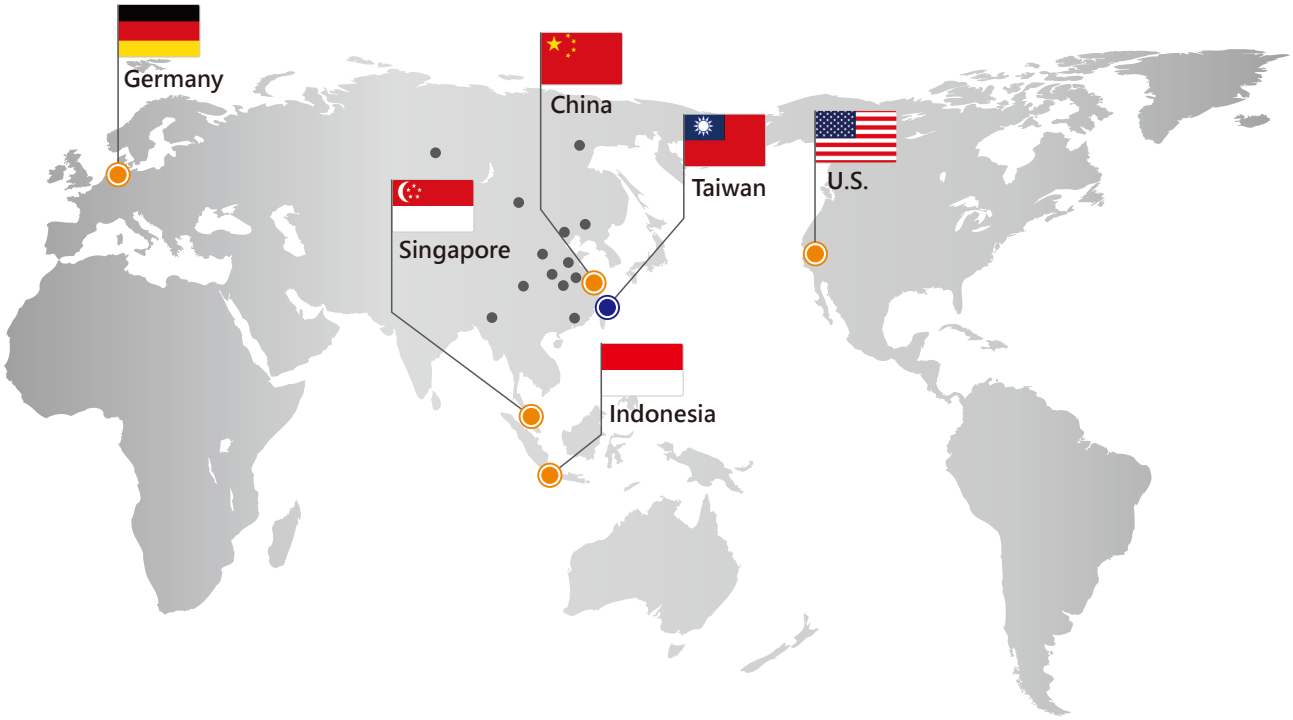

Head Quarter

Taiwan
FineTek Co., Ltd. - Taipei Head Quarter
No.16, Tzuchiang St., Tucheng Industrial Park
New Taipei City 236, Taiwan
TEL: 886-2-2269-6789
FAX: 886-2-2268-6682
EMAIL: info@fine-tek.com

North America

California, U.S.
Aplus Finetek Sensor Inc. - US Office
355 S. Lemon Ave, Suite D
Walnut, CA 91789
TEL: 1 909 598 2488
FAX: 1 909 598 3188
EMAIL: info@aplusfine.com

Europe

Germany
FineTek GmbH - Germany Office
Bei den Kämpen 26
21220 Seevetal-Ramelsloh, Germany
TEL: +49-(0)4185-8083-12
FAX: +49-(0)4185-8083-80
EMAIL: info@fine-tek.de

Mütec Instruments GmbH - Germany Office
Bei den Kämpen 26
21220 Seevetal-Ramelsloh, Germany
TEL: +49-(0)4185-8083-0
FAX: +49-(0)4185-8083-80
EMAIL: muetec@muetec.de

Asia

China
Fine automation Co., Ltd. - Shanghai Factory
No.451 DuHui Rd, MinHang District, Shanghai,
China 201109
TEL: 86-21-6490-7260
EMAIL: info.sh@fine-tek.com

Singapore
FineTek Pte Ltd. - Singapore Office
37 Kaki Bukit Place, Level 4 Singapore 416215
TEL: 65-6452-6340
EMAIL: info.sg@fine-tek.com

Indonesia
PT. FineTek Automation Indonesia - Indonesia Office
PERGUDANGAN TUNAS BITUNG
JL. Raya Serang KM. 13,8, Blok C3 No. 12&15,
Bitung Cikupa, Tangerang 15710
TEL: 62 (021)-2958-1688
EMAIL: info.id@fine-tek.com

FineTek

Distributor:

08-SPFEP-032026