Rotary Paddle Level Switch

FineTek

Innovation · Quality · Sharing

PRODUCT INTRODUCTION

WORKING PRINCIPLE

The purpose of the rotary paddle level switch is to detect the presence of solid/powdery material in most kinds of tanks, bins and containers.
The unit is usually located through a bin wall at the top, middle or low level of a bin. During normal operation (no material present) a synchronous motor rotates the paddle at RPM. When this paddle rotation is impeded by material, surrounding the paddle, motor will stall and cause the Micro-switch to change state (indicating an alarm or control).

FEATURES

- Rugged sealing ring prevents dust from infiltrating the housing body along the shaft.
- Adjustable torque.
- If the rotary paddle encounters overloading, the motor will automatically shut down the motor to prevent damage to the inner mechanisms and extend motor life.
- Very suitable for small tanks and low density materials
- Adjustable and extendible shaft models available
- A wide variety of paddles are available

APPLICATIONS

- Plastics and synthetics
- Chemicals and fertilizer
- Pharmaceuticals
- Food and beverage,
- Agriculture and fodder mills/depots
- Cement as well as ceramics
- Power plants
- Various incinerators

BENEFITS

- Airtight sealed device.
- Outdoor and strenuous environment application
- Stable and reliable performance.
- Lightweight and easy to install
- Practically designed to allow maintenance, checks
  and replacement
- Not necessary to remove the complete set from the tank.

STRUCTURE

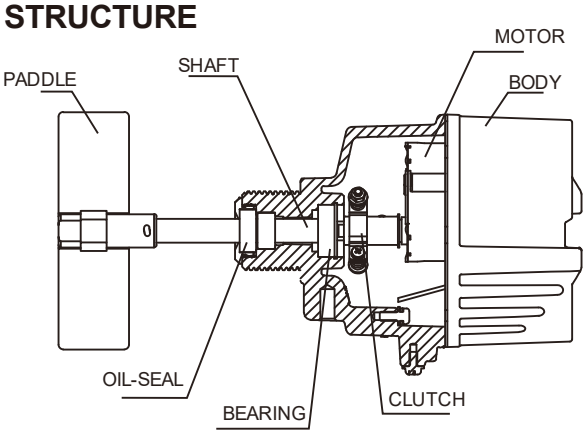

STANDARD TYPE SEX5

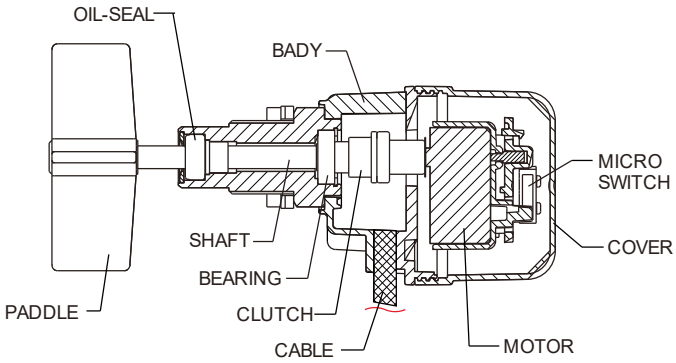

MINI TYPE SEX4

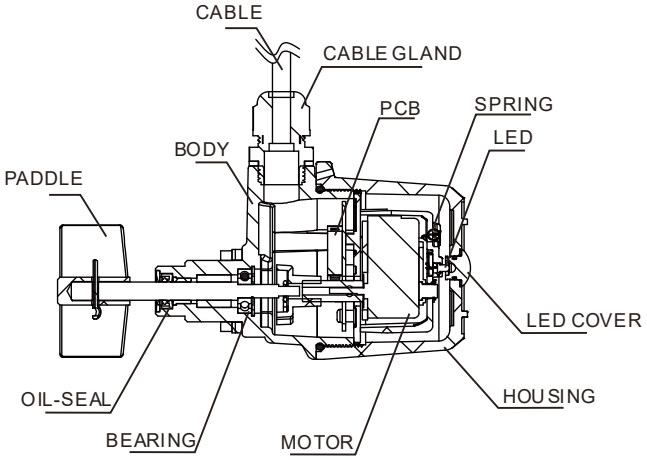

MINI TYPE SEX3

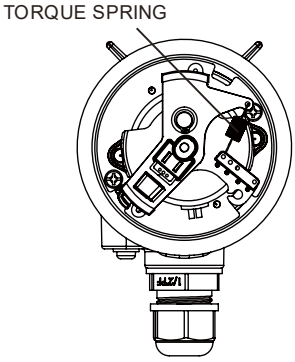

WORKING PRINCIPLE & TORQUE ADJUSTING

CONTROL SWITCH WORKING PRINCIPLE

1. A synchronous turning motor indicates the tank or container's material isn't obstructing the paddles,C & L [COM & NC] are connected.
2. When the material is obstructing the paddles, C&L [COM & NC] are disconnected, C&H [COM & NO] are connected and the motor's current is cut off.
3. When the material drops away from the paddles and the motor starts again C & L [COM & NC] connect and the cycle has begun once again.

TORQUE ADJUSTING MECHANISM AND WIRING

The torque spring is applied to adjust the shaft output torque. Default settings aret "weak" and can be adjusted to the customer's target based on the tank contents and S.G. (special gravity) of the material.
Higher S.G. materials require stronger torque settings. Start with high settings and slowly release the torque force until the appropriate setting is found.

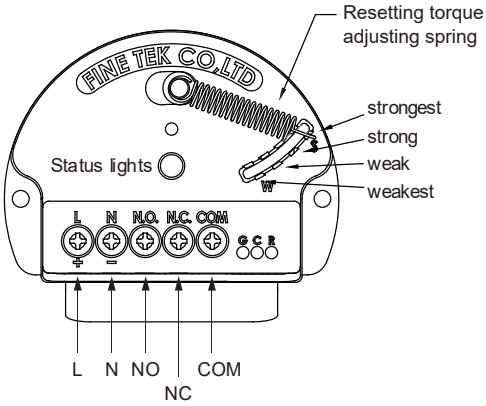

Available: SEX5 AC TYPE

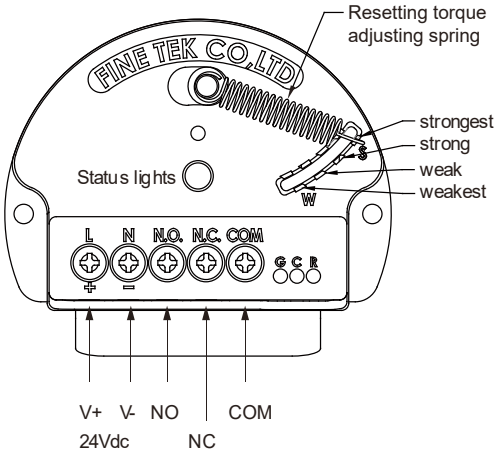

Available: SEX5 DC TYPE

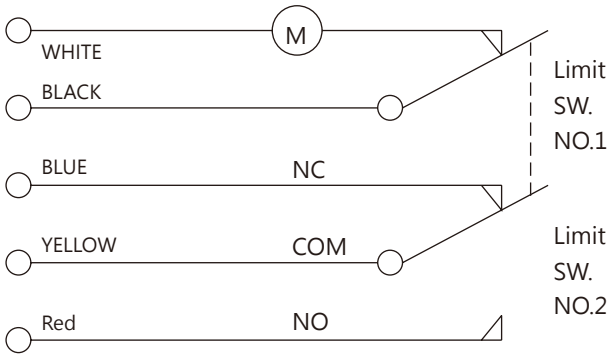

※Do not tamper with the spring as it may cause the Rotary Paddle to malfunction.

SPRING ADJUSTING HOLE

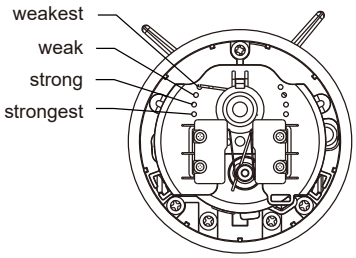

SEX4

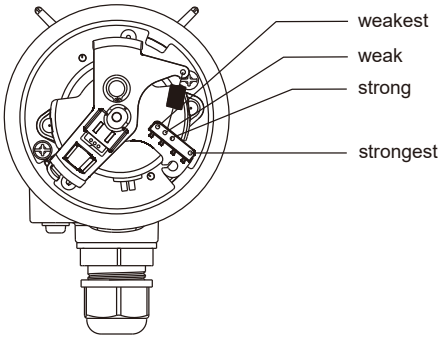

SEX2

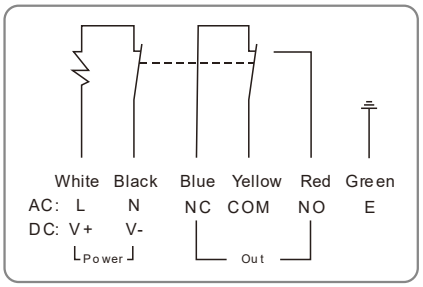

Available:SEX2/SEX4

GENERAL TYPE - SEX5

Power source：(A)110Vac,(B)220Vac,(C)240Vac,
(D)24Vac,50/60Hz,(E)24Vdc
Power consumptio：3W
Contact capacity：SPDT 5A/250Vac
Rotary speed：1 R.P.M.
Insulation test voltage： 2500V

Connection：1"PF screw or JIS 2-1/2"x5kg/cm^2
Protection/ material：IP65/ADC-12
Conduit：1/2"PF
Material density：0.5g/cm^3 (30Lb/ft^3)

SE110

SCREW TYPE
Horizontal mounting
Operation Temp.:-20°C ~ 70°
Weight: 1.2 kg

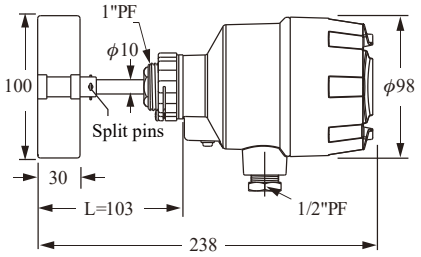

SE111

FLANGE TYPE
Horizontal mounting
Operation Temp.: -20°C ~ 70°C
Weight: 1.7 kg

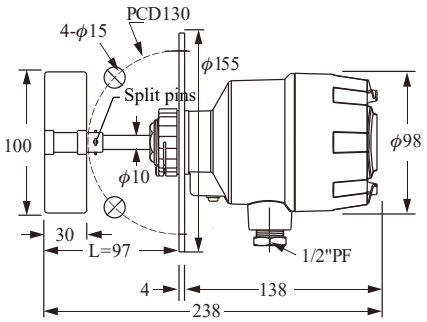

SE120

SHAFT PROTECTIVE TUBE TYPE
Horizontal / Vertical mounting
Operation Temp.:-20°C ~ 70°C
Weight: 1.2 kg
Standard Length:
L--250mm (2.2 kg)
L--500mm (2.5 kg)
L--750mm (2.8 kg)
(Customized lengths available)

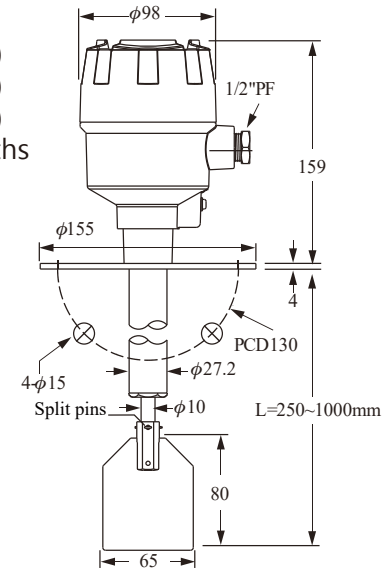

SE130

SHAFT LENGTH ADJUSTABLE TYPE
Horizontal / Vertical mounting
Operation Temp.:-20°C ~ 70°C
Weight: 1.2 kg
Standard Length:
L--450~630mm(2.5 kg)
L--650~1000mm(2.8 kg)
L--750~1200mm(3.0 kg)
(Customized lengths available)

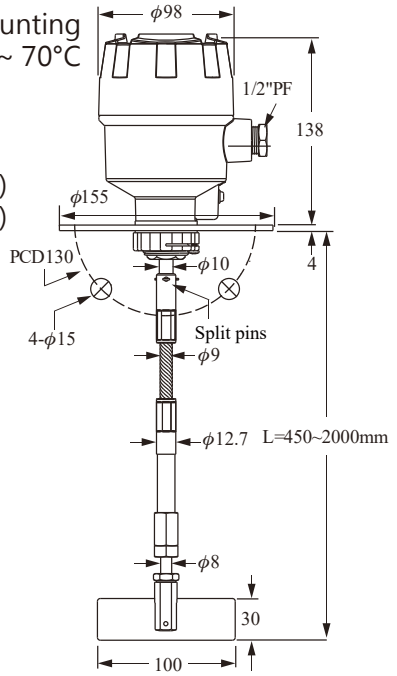

PRODUCT INTRODUCTION

SE140

HI-TEMP TYPE
Horizontal mounting
Operation Temp.:Max.200°
Weight: 2.1 kg

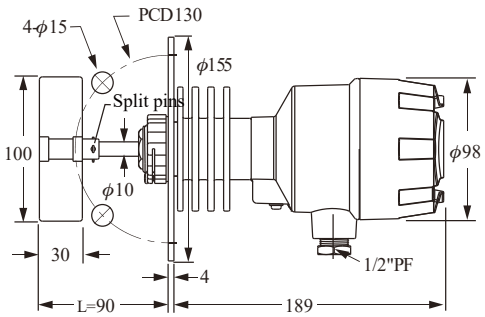

SE141

HI-TEMP TYPE
PROTECTIVE TUBE TYPE
Horizontal / Vertical mounting
Operation Temp.:Max.200°
Weight: 1.2 kg
Standard Length (option):
L--250mm(2.6 kg)
L--500mm(2.9 kg)
L--750mm(3.2 kg)
(Special length
is made by order)

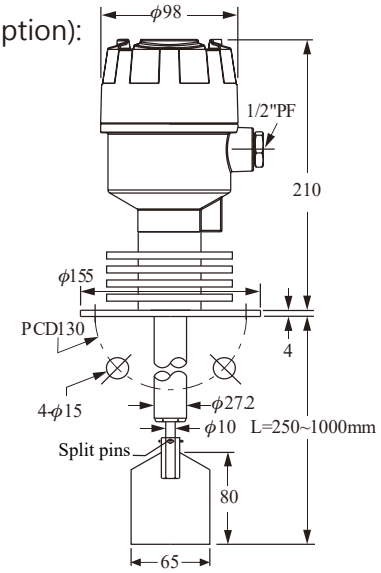

SE146

HI-TEMP SHAFT
LENGTH ADJUSTABLE TYPE
Vertical mounting
Operation Temp.:Max.200°C
Standard Length (option):
L--450~630mm (3 kg)
L--650~1000mm(3.3 kg)
L--750~ 1200mm(3.5 kg)
(Special length
is made by order)

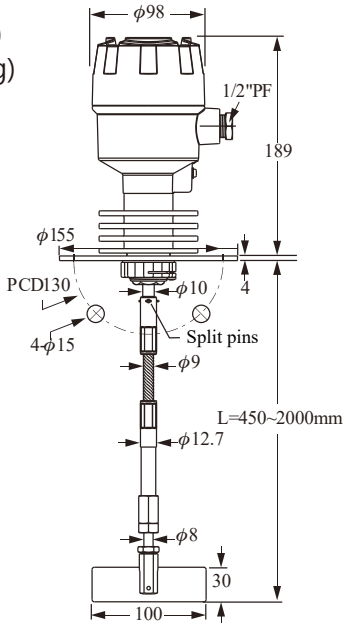

SE160

CABLE WIRE TYPE
Vertical mounting
Operation Temp.:-20~70°C
Standard Length (option):
L--450mm(2.5kg)
L--650mm(2.8kg)
L--750mm(3 kg)
(Special length
is made by order)

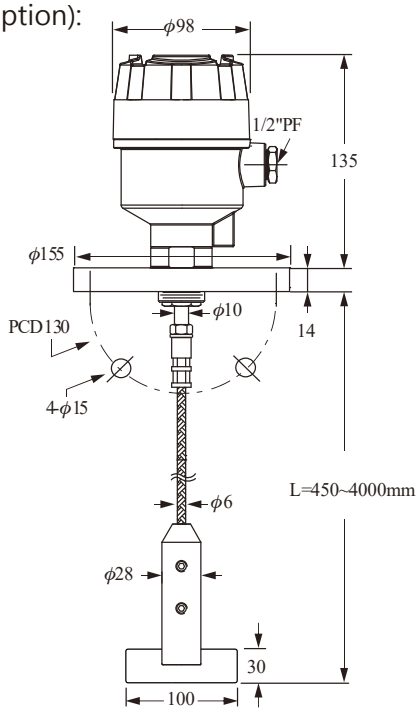

MODEL NUMBER / ORDER CODE COMPARISON TABLE

Model Number	Order Code
SE110	SEX50000-AA
SE111	
SE120	SEX50000-AB
SE130	SEX50000-AC
SE140	SEX50200-AA
SE141	SEX50200-AB
SE146	SEX50200-AC
SE160	SEX50000-AD

NEW / OLD PADDLE MODEL COMPARISON TABLE

New	Figure		Dimension(WxH)	Old
B	Rectangular shaped type	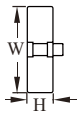	100x30	A
C	Shovel shaped type	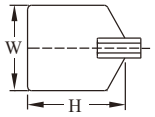	65x80	B
D			65x120	C
E			80x80	D
F	Rectangular type, one sided	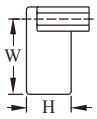	50x30	E
G	Scimitar shaped type	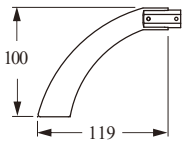	100x119	F
H	Folding type	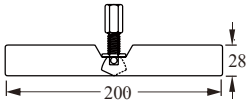	200x28	J
K	Weights type	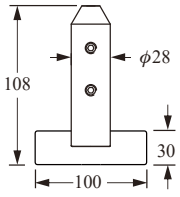	100x108	X
N	Scimitar shaped type (PC)	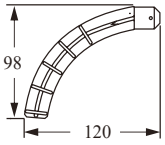	98x120	
P	Cross bladed type (PC)	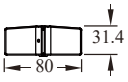	80x32	

PROBE LENGTH LIST FOR GENERAL TYPE (WITH DIFFERENT PADDLES)

Product model / Paddle model		SE110 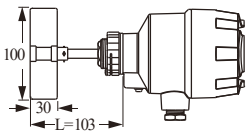	SE111 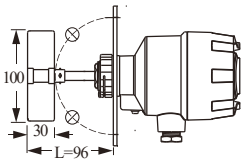	SE140 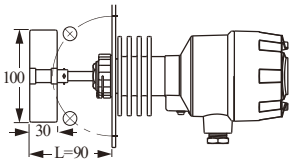
Rectangular shaped type	100x30	L=103	L=96	L=90
Shovel shaped type 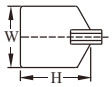	65x80	L=153	L=146	L=142
	65x120	L=193	L=186	L=182
	80x80	L=153	L=146	L=142
Rectangular type, one sided	50x30	L=104	L=97	L=94
Scimitar shaped type 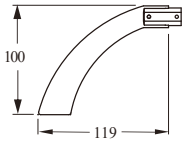	100x119	L=192	L=184	L=182
Folding type 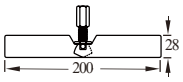	200x28	L=126	L=119	L=114
Scimitar shaped type(PC) 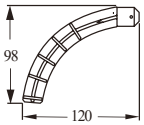	98x120	L=175	L=168	Not suitable for high temp.(>120°C) Stainless steel paddle suggested
Cross bladed type(PC) 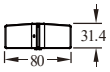	80x32	L=81	L=74	

ORDER INFORMATION

General Type

SEX5 ⑤⑥ 0 0 - A ⑩⑪⑫⑬⑭⑮⑯⑰⑱⑲⑳㉑㉒

⑤⑥ Model

00: Standard
02: Hi-temperature

⑩ Construction

A: General type
B: Shaft protective tube type
C: Shaft length adjustable type
D: Cable wire type

⑪ Power supply

A: AC110V
B: AC220V
C: AC240V
D: AC24V
E: DC24V

Connection

⑫⑬

Flange item
AK: JIS-FF
AN: ANSI-RF
AS: DIN-FF
BC: Standard thin flange
(Suitable for 2-1/2"dimension)

Thread item
AA: JIS
AC: ANSI

⑭⑮

A8: 1"
B1: 1-1/2"
B2: 2"
B4: 2-1/2"

⑯⑰

01: PT male
03: PF male
07: NPT male
39: 5 kg/cm^{2}x4T(Thin flange)
40: 5 kg/cm^2
42: 10 kg/cm^2
48: 150 Lbs
49: 300 Lbs
57: PN10
58: PN16

⑱ Paddle model

A: None
B: 100x30(WxH)
C: 65x80(WxH)
F: 50x30(WxH)
G: Scimitar type 100x131(WxH)
H: Folding type 200x28(WxH)
K: Cable wire type only100x108(WxH)
N: Scimitar shaped type(PC) 98x120(WxH)
P: Cross bladed type(PC)80x32(WxH)

※N type and P type not suitable for high temperature(>120°C)

⑲⑳㉑㉒ Length

Code	Length range
0001~4000	0001~4000mm

※The General power socket is not shared with the warning type and explosion proof type.

WARNING LIGHT TYPE - SEX5

Power source：(A)110Vac,(B)220Vac,(C)240Vac,
(D)24Vac,50/60Hz,(E)24Vdc
Power consumptio：3W
Contact capacity：SPDT 5A/250Vac
Rotary speed：1 R.P.M.
Insulation test voltage： 2500V

Connection：1"PF screw or JIS 2-1/2"x5kg/cm^2
Upper cover protection / material : IP67 / Pc cover
Twrminal box protection / material : IP67 / ADC-12
Conduit：1/2"PF
Material density：0.5g/cm^3 (30Lb/ft^3)

SE110

SCREW TYPE
Horizontal mounting
Operation Temp.: -20°C ~ 85°C
Weight: 1.2 kg

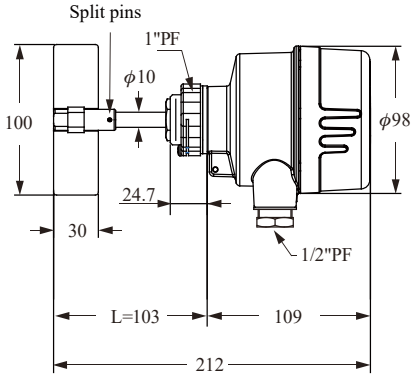

SE130

SHAFT LENGTH ADJUSTABLE TYPE
Vertical mounting
Operation Temp.: -20°C ~ 85°C
Weight: 1.2 kg
Standard Length:
L--450~630mm(2.5 kg)
L--650~1000mm(2.8 kg)
L--750~1200mm(3.0 kg)
(Customized lengths available)

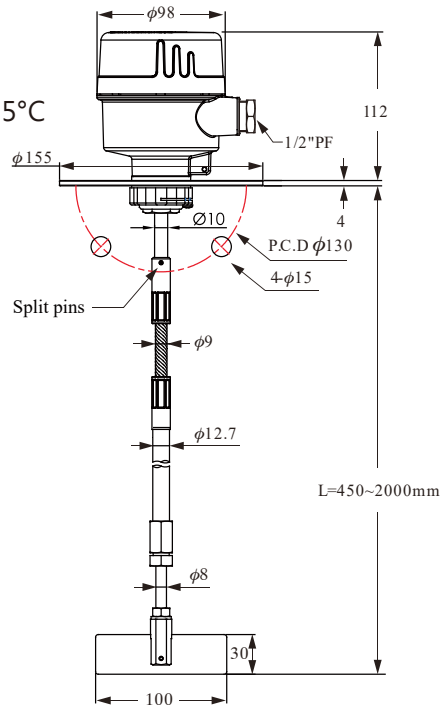

SE120

SHAFT PROTECTIVE TUBE TYPE
Horizontal / Vertical mounting
Operation Temp.: -20°C ~ 85°C
Weight: 1.2 kg
Standard Length:
L--250mm (2.2 kg)
L--500mm (2.5 kg)
L--750mm (2.8 kg)
(Customized lengths available)

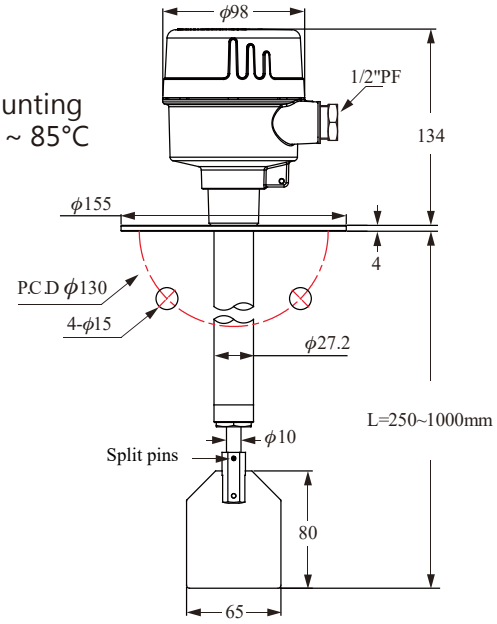

WARNING LIGHT TYPE - SEX5

SE140

SCREW TYPE

Horizontal mounting
Operation Temp.: Max.200°C
Weight: 2.1 kg

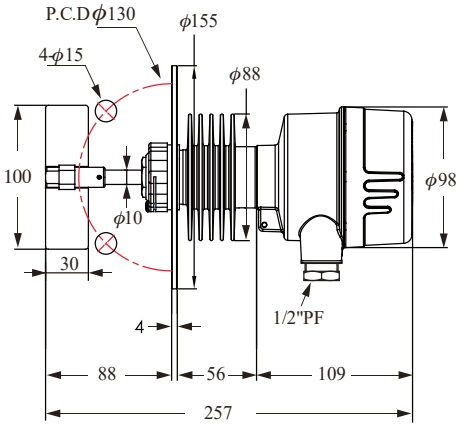

SE141

HI-TEMP TYPE
PROTECTIVE TUBE TYPE

Horizontal / Vertical mounting
Operation Temp.: Max.200°C
Weight: 1.2 kg
Standard Length:
L--250mm (2.6 kg)
L--500mm (2.9 kg)
L--750mm (3.2 kg)
(Special length
is made by order)

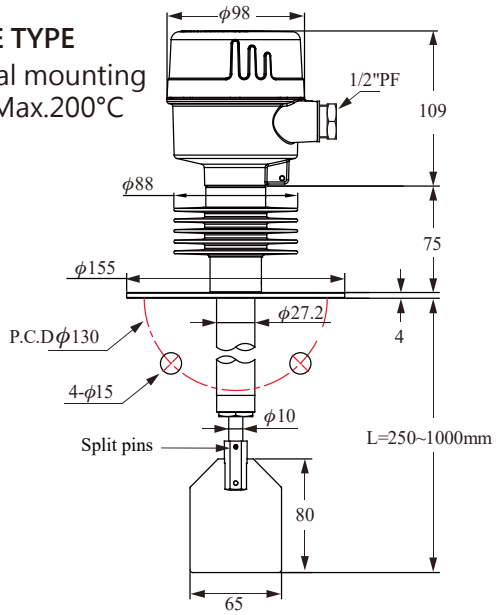

SE146

HI-TEMP SHAFT
LENGTH ADJUSTABLE TYPE

Vertical mounting
Operation Temp.: Max.200°C
Weight: 1.2 kg
Standard Length:
L-- 450~630mm (3 kg)
L-- 650~1000mm (3.3 kg)
L-- 750~1200mm (3.5 kg)
(Special length
is made by order)

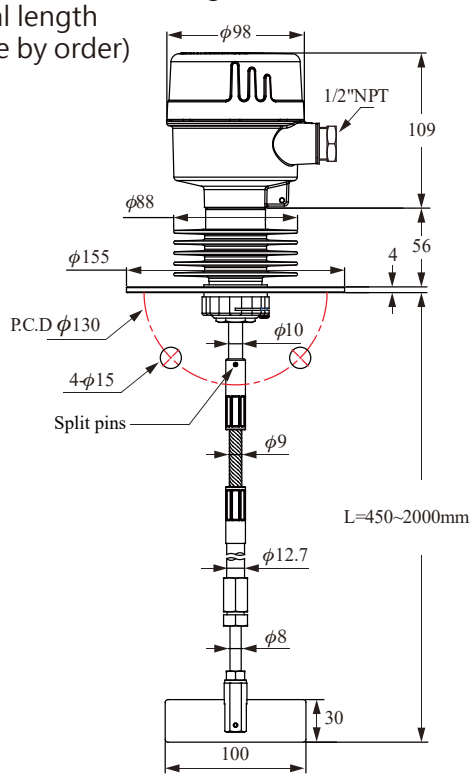

SE160

CABLE WIRE TYPE

Vertical mounting
Operation Temp.: -20°C ~ 85°C
Weight: 1.2 kg
Standard Length:
L-- 450mm (2.5 kg)
L-- 650mm (2.8 kg)
L-- 750mm (3 kg)
(Special length
is made by order)

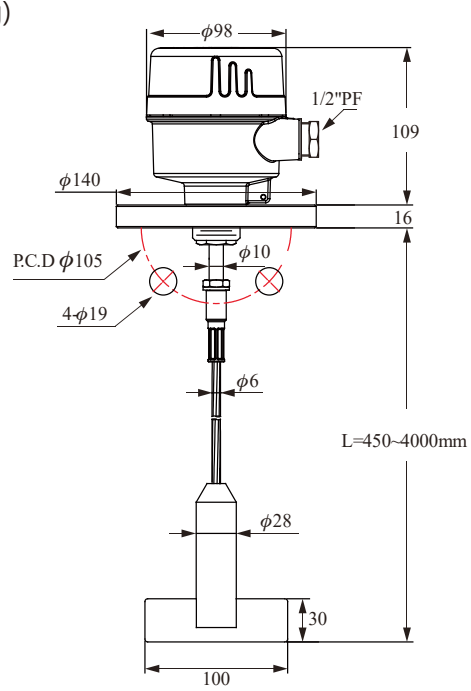

NEW / OLD PADDLE MODEL COMPARISON TABLE

New	Figure		Dimension(WxH)	Old
B	Rectangular shaped type	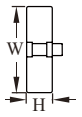	100x30	A
C	Shovel shaped type	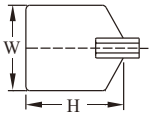	65x80	B
D			65x120	C
E			80x80	D
F	Rectangular type, one sided	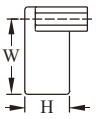	50x30	E
G	Scimitar shaped type	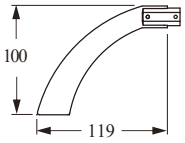	100x119	F
H	Folding type	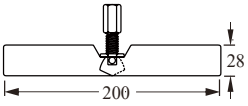	200x28	J
K	Weights type	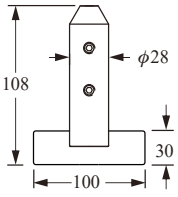	100x108	X
N	Scimitar shaped type (PC)	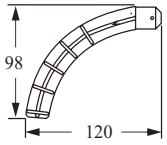	98x120	
P	Cross bladed type (PC)	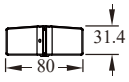	80x32	

PROBE LENGTH LIST FOR WARNING LIGHT TYPE (WITH DIFFERENT PADDLES)

Product model / Paddle model		SE110 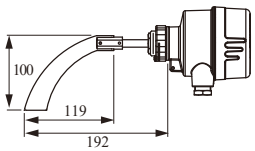	SE111 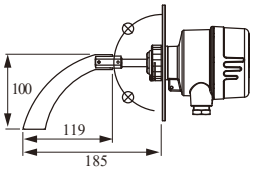	SE140 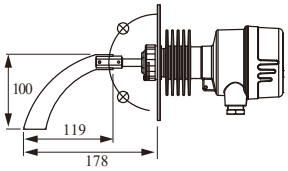
Rectangular shaped type	100x30	L=103	L=96	L=88
Shovel shaped type 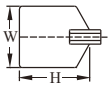	65x80	L=153	L=146	L=138
	65x120	L=193	L=186	L=178
	80x80	L=153	L=146	L=138
Rectangular type, one sided	50x30	L=104	L=97	L=89
Scimitar shaped type 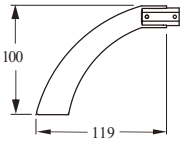	100x119	L=192	L=185	L=178
Folding type 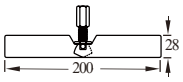	200x28	L=126	L=119	L=112
Scimitar shaped type(PC) 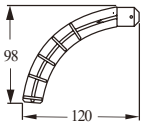	98x120	L=175	L=168	Not suitable for high temp.(>120°C) Stainless steel paddle suggested
Cross bladed type(PC) 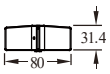	80x32	L=81	L=74	

ORDER INFORMATION

General Type

⑤⑥ ⑦ ⑧ ⑨ ⑩ ⑪ ⑫ ⑬ ⑭ ⑮ ⑯ ⑰ ⑱ ⑲ ⑳ ㉑ ㉒

SEX5 □□ 0 0 - B □□□□□□□□□□□□□□

⑤⑥ Model

00: Standard
02: Hi-temperature

⑩ Construction

A: General type
B: Shaft protective tube type
C: Shaft length adjustable type
D: Cable wire type

⑪ Power supply

A: AC110V
B: AC220V
C: AC240V
D: AC24V
E: DC24V

Connection

⑫⑬

Flange item
AK: JIS-FF
AN: ANSI-RF
AS: DIN-FF
BC: Standard thin flange
(Suitable for 2-1/2"dimension)

Thread item
AA: JIS
AC: ANSI

⑭⑮

A8: 1"
B1: 1-1/2"
B2: 2"
B4: 2-1/2"

⑯⑰

01: PT male
03: PF male
07: NPT male
39: 5 kg/cm^{2}x4T(Thin flange)
40: 5 kg/cm^2
42: 10 kg/cm^2
48: 150 Lbs
49: 300 Lbs
57: PN10
58: PN16

⑱ Paddle model

A: None
B: 100x30(WxH)
C: 65x80(WxH)
F: 50x30(WxH)
G: Scimitar type 100x131(WxH)
H: Folding type 200x28(WxH)
K: Cable wire type only100x108(WxH)
N: Scimitar shaped type(PC) 98x120(WxH)
P: Cross bladed type(PC)80x32(WxH)

※N type and P type not suitable for high temperature(>120°C)

⑲⑳㉑㉒ Length

Code	Length range
0001~4000	0001~4000mm

※The General power socket is not shared with the warning type and explosion proof type.

EXPLOSION PROOF TYPE - SEX5

TS Ex ta/tb IIIC T85℃ . . . T200°C Da/Db
NEPSI Ex ta/tb IIIC T200*°C Da/Db
ATEX Ⓔx II 1D/2D Ex ta/tb IIIC T85°C or T100°C or T150°C or T200°C Da/Db
IECEx Ex ta/tb IIIC T85°C or T100°C or T150°C or T200°C Da/Db
CSA Ex ta/tb IIIC T85°C...T200°C Da/Db
Zone 20 / Zone 21 AEx ta/tb IIIC T85°C ...T200°C Da/Db
Class II, Division 1, Groups E, F, G, T200°C

Power source：(A)110Vac,(B)220Vac,(C)240Vac, (D)24Vac,50/60Hz,(E)24Vdc
Power consumptio：3W
Contact capacity：SPDT 5A/250Vac
Rotary speed：1 R.P.M.
Insulation test voltage： 2500V

Connection : 1"PF screw (minimum)
Protection/ material : IP67 / ADC-12
Conduit : 1/2"NPT/ADC-12
Material density：0.5g/cm³ (30Lb/ft³)

SE110

SCREW TYPE
Horizontal mounting
Operation Temp.:-20°C ~ 85°C
Weight: 1.2 kg

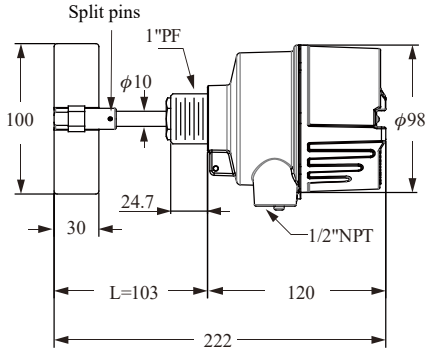

SE120

SHAFT PROTECTIVE TUBE TYPE
Horizontal / Vertical mounting
Operation Temp.:-20°C ~85°C
Weight: 1.2 kg
Standard Length:
L-- 250mm (2.2 kg)
L--500mm (2.5 kg)
L--750mm (2.8 kg)
(Customized lengths available)

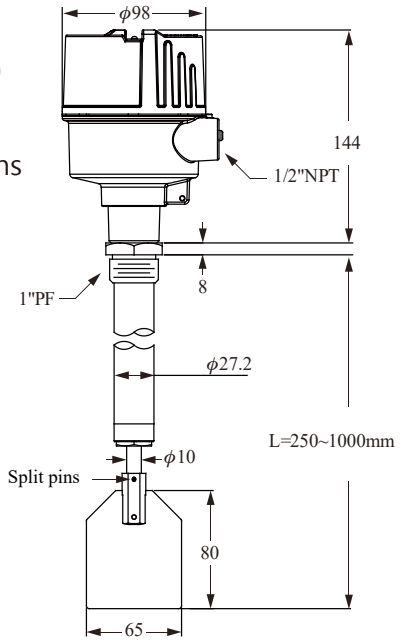

SE130

SHAFT LENGTH ADJUSTABLE TYPE
Horizontal / Vertical mounting
Operation Temp.:-20°C ~ 85°C
Weight: 1.2 kg
Standard Length:
L--450~630mm(2.5 kg)
L--650~1000mm(2.8 kg)
L--750~1200mm(3.0 kg)
(Customized lengths available)

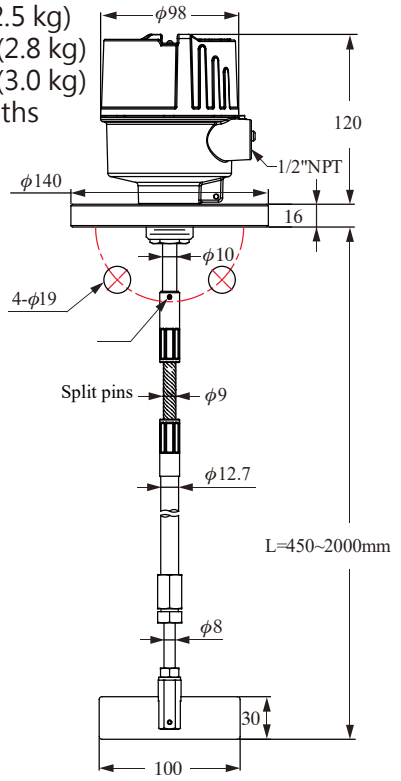

EXPLOSION PROOF TYPE - SEX5

TS Ex ta/tb IIIC T85℃ . . . T200°C Da/Db
NEPSI Ex ta/tb IIIC T200*°C Da/Db
ATEX Ⓔx II 1D/2D Ex ta/tb IIIC T85°C or T100°C or T150°C or T200°C Da/Db
IECEx Ex ta/tb IIIC T85°C or T100°C or T150°C or T200°C Da/Db
CSA Ex ta/tb IIIC T85°C...T200°C Da/Db
Zone 20 / Zone 21 AEx ta/tb IIIC T85°C ...T200°C Da/Db
Class II, Division 1, Groups E, F, G, T200°C

SE140

HI-TEMP TYPE
Horizontal mounting
Operation Temp.: Max.200°C
Weight: 2.1 kg

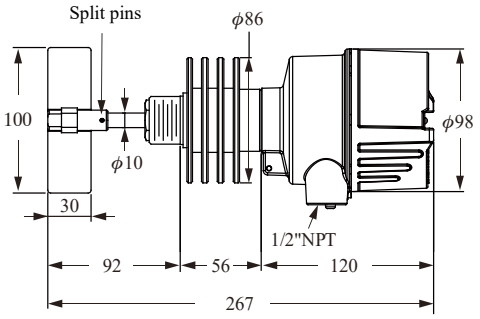

SE141

HI-TEMP TYPE
PROTECTIVE TUBE TYPE
Horizontal / Vertical mounting
Operation Temp. : Max.200°C
Standard Length:
(Option)
L--250mm (2.6 kg)
L--500mm (2.9 kg)
L--750mm (3.2 kg)
(Special length
is made by order)

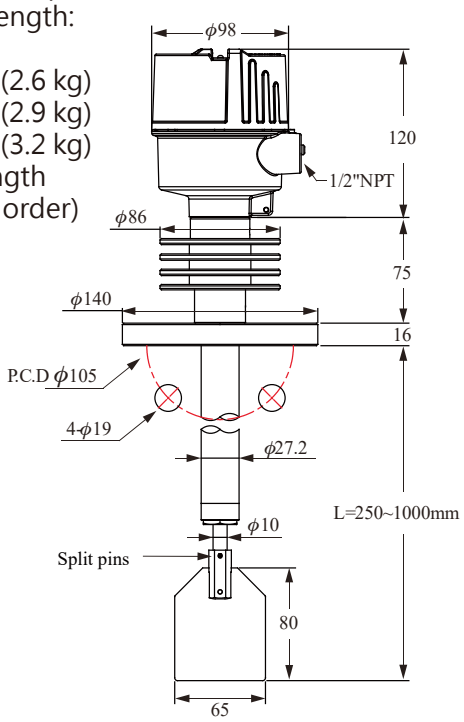

SE146

HI-TEMP SHAFT
LENGTH ADJUSTABLE TYPE
Vertical mounting
Operation Temp.: Max.200°C
Standard Length:
(Option)
L-- 450~630mm (3 kg)
L-- 650~1000mm (3.3 kg)
L-- 750~1200mm (3.5 kg)
(Special length
is made by order)

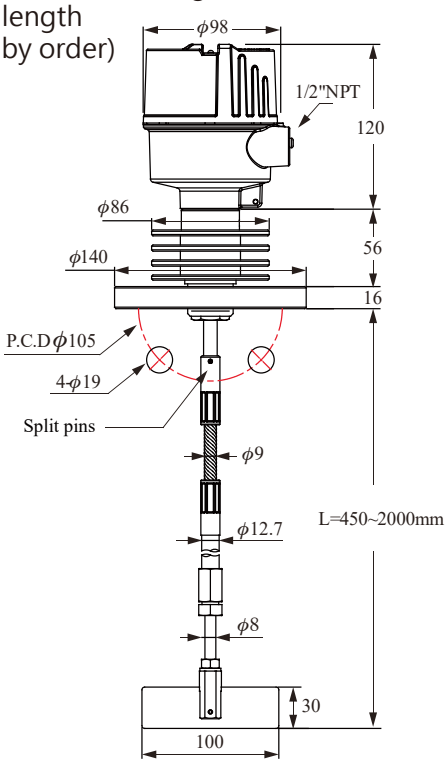

SE160

CABLE WIRE TYPE
Vertical mounting
Operation Temp.: -20°C ~ 85°C
Standard Length:
(Option)
L-- 450mm (2.5 kg)
L-- 650mm (2.8 kg)
L-- 750mm (3 kg)
(Special length
is made by order)

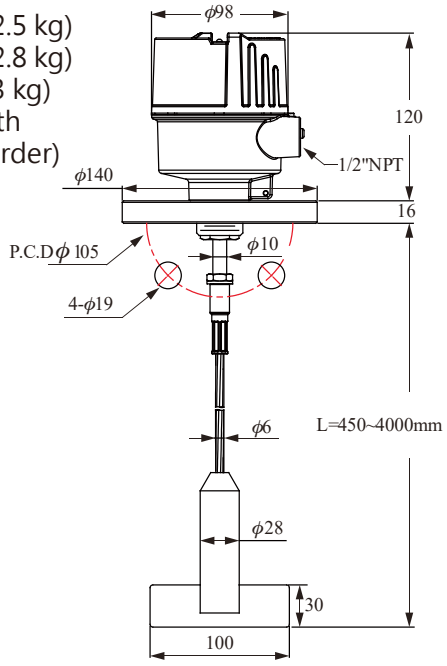

NEW / OLD PADDLE MODEL COMPARISON TABLE

New	Figure		Dimension(WxH)	Old
B	Rectangular shaped type	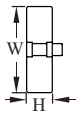	100x30	A
C	Shovel shaped type	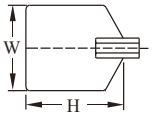	65x80	B
D			65x120	C
E			80x80	D
F	Rectangular type, one sided	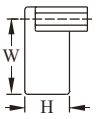	50x30	E
G	Scimitar shaped type	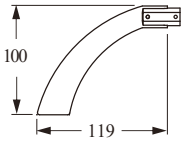	100x119	F
H	Folding type	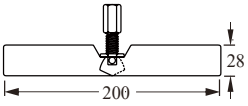	200x28	J
K	Weights type	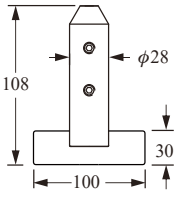	100x108	X

PROBE LENGTH LIST FOR WARNING LIGHT TYPE (WITH DIFFERENT PADDLES)

Product model / Paddle model		SE110 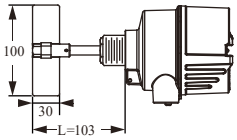	SE140 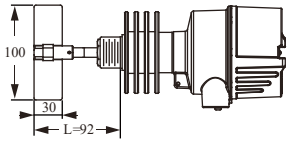
Rectangular shaped type	100x30	L=103	L=92
Shovel shaped type 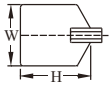	65x80	L=153	L=142
	65x120	L=193	L=182
	80x80	L=153	L=142
Rectangular type, one sided	50x30	L=104	L=93
Scimitar shaped type 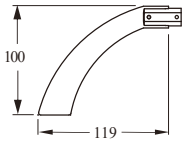	100x119	L=192	L=181
Folding type 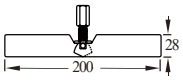	200x28	L=126	L=115

ORDER INFORMATION

⑤⑥ ⑦⑧ ⑩ ⑪ ⑫ ⑬ ⑭ ⑮ ⑯ ⑰ ⑱ ⑲ ⑳ ㉑ ㉒

SEX5 □□□□-A□□□□□□□□□□□□□□

⑤⑥ Model

00: Standard
02: Hi-temperature

⑦⑧ Certification

1D: ATEX-Dust
2D: IECEx-Dust
5D: TS-Dust
6D: CSA-Dust
7D: NEPSI-Dust

⑩ Construction

A: General type
B: Shaft protective tube type
C: Shaft length adjustable type
D: Cable wire type

⑪ Power supply

A: AC110V
B: AC220V
C: AC240V
D: AC24V
E: DC24V

Connection

⑫⑬

Flange item
AK: JIS-FF
AS: DIN-FF
AJ: JIS-RF
AM: JIS-WNRF
AL: JIS:SLIP
AN: ANSI-RF
AO: ANSI-FF
AP: ANSI-WNRF
AQ: ANSI-SLIP
AR: DIN-RF
AT: DIN-WNRF
AU: DIN-SLIP Thread item
AV: GB-RF
AW: GB-FF
BC: Standard thin flange
(Suitable for 2-1/2"dimension)

Thread item
AA: JIS
AB: ISO
AC: ANSI/AST

⑭⑮

A7:3/4"
A8: 1"
A9: 1-1/4"
B1: 1-1/2"
B2: 2"
B3: 2-1/4"
B4: 2-1/2"
B5: 3"
B6: 3-1/2"
B7: 4"
B8: 5"
B9: 6"
C1: 8"
C2: 10"
J9: M27
K3: M30
K5: M32
K6: M33
L9: M45
SS: Special specification

⑯⑰

01: PT male
03: PF male
05: BSP male
07: NPT male
09: NPTR male
11: NRTF male
15: UNF male
23: UNC male
39: 5 kg/cm^{2}x4T(Thin flange)
78: M*pitch1.0
80: M*pitch1.25
82: M*pitch1.5
84: M*pitch2
86: M*pitch2.5
88: M*pitch3
91: BSPT male
SS: Special specification

⑱ Paddle model

A: None
B: 100x30(WxH)
C: 65x80(WxH)
D: 65x120(WxH)
E: 80x80(WxH)
F: 50x30(WxH)
G: Scimitar type 100x131(WxH)
H: Folding type 200x28(WxH)
K: Cable wire type only100x108(WxH)
S: Special blade

⑲⑳㉑㉒ Length

Code	Length range
0001~4000	0001~4000mm

EXPLOSION PROOF TYPE

TS Ex db IIB T6...T3 Gb
Ex tb IIIC T85°C...T200°C Db
NEPSI Ex d IIC T3~T6 Gb
Ex tD A20/A21 IP65 T80°C / T95°C / T130°C / T190°C
ATEX Ⓔx II 2G Ex d IIB T3 or T4 or T5 or T6 Gb
Ⓔx II 2D Ex tb IIIC T200°C or T135°C or T100°C or T85°C Db
IECEx Ex db IIB T3 or T4 or T5 or T6 Gb
Ex tb IIIC T200°C or T135°C or T100°C or T85°C Db

Power source：(A)110Vac,(B)220Vac,(C)240Vac,
(D)24Vac,50/60Hz
Power consumptio：3W
Contact capacity：SPDT 3A/250Vac
Rotary speed：1 R.P.M.
Insulation test voltage：AC 1500Vx1minute

Connection：1"PF screw or flange 1"~6"
2-1/2"x5kg/cm^2 (std.)
Housing material：AL Alloy, ADC-12
Conduit：1/2" (std.) or 3/4"NPT
Material density：0.5g/cm^3

SE170

EXPLOSION PROOF CONNECTION TYPE
Horizontal mounting
Operation Temp.: 20°C ~ 70°C

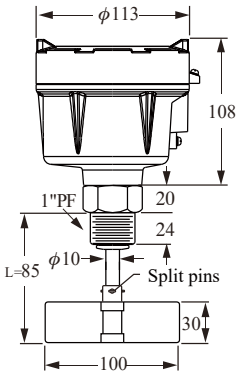

SE171

EXPLOSION PROOF FLANGE TYPE
Horizontal mounting
Operation Temp.: 20°C ~ 70°C

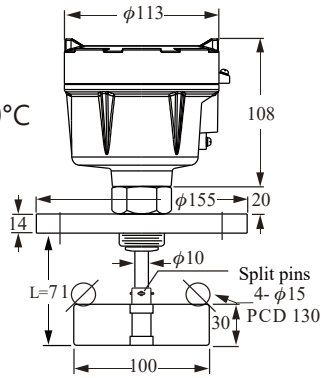

SE172

EXPLOSION PROOF CONNECTION TYPE
Horizontal mounting
Operation Temp.: 20°C ~ 70°C
Standard Length:
(Option)
L-- 250 mm
L-- 500 mm
L-- 750 mm
(Customized lengths available)

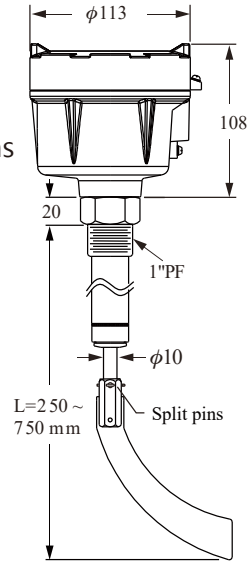

SE173

EXPLOSION PROOF ADJUSTABLE SHAFT TYPE
Vertical mounting
Operation Temp.: -20°C ~ 70°C
Standard Length:
(Option)
L-- 450~630mm
L-- 650~1000mm
L-- 750~1200mm
(Special length is made by order)

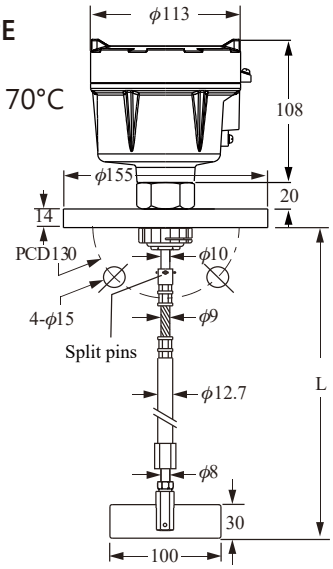

SE174

EXPLOSION PROOF FLANGE TYPE
Horizontal mounting
Operation Temp.: Max.190°C

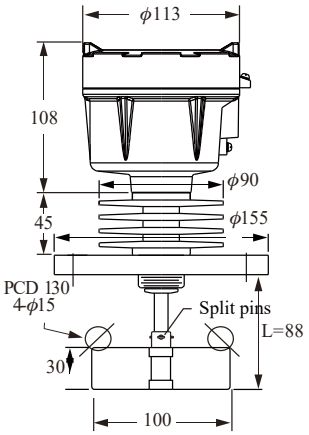

EXPLOSION PROOF TYPE

TS Ex db IIB T6...T3 Gb
Ex tb IIIC T85°C...T200°C Db
NEPSI Ex d IIC T3~T6 Gb
Ex tD A20/A21 IP65 T80°C / T95°C / T130°C / T190°C
ATEX Ⓔx II 2G Ex d IIB T3 or T4 or T5 or T6 Gb
Ⓔx II 2D Ex tb IIIC T200°C or T135°C or T100°C or T85°C Db
IECEx Ex db IIB T3 or T4 or T5 or T6 Gb
Ex tb IIIC T200°C or T135°C or T100°C or T85°C Db

SE175

EXPLOSION PROOF HI-TEMP SHAFT PROTECTIVE TUBE TYPE

Horizontal mounting
Operation Temp.: Max.190°C
Special length is made by order

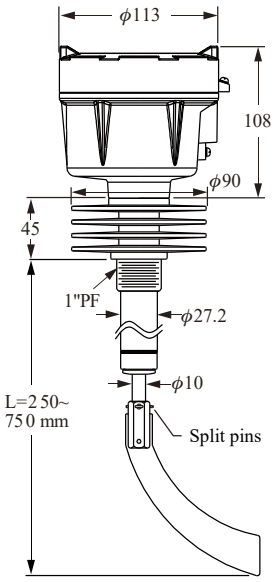

SE176

EXPLOSION PROOF HI-TEMP ADJUSTABLE SHAFT TYPE

Vertical mounting
Operation Temp.: Max.190°C
Special length is made by order

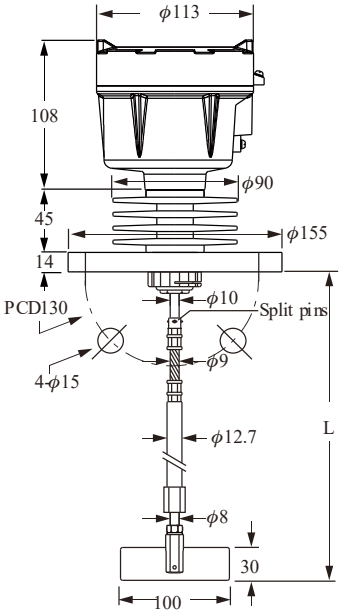

SE177

EXPLOSION PROOF CABLE WIRE TYPE

Vertical mounting
Operation Temp.: -20°C ~ 70°C
Special length is made by order

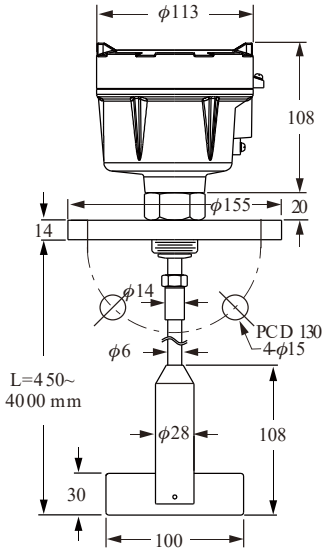

PADDLE INTRODUCTION

A

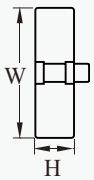

(A) 100x30(WxH), Min. fixed hole diameter size ϕ90mm.

B,C,D

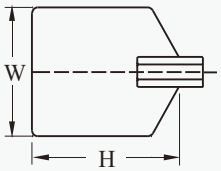

(B) 65x80 (WxH), Directly mounted into 2-1/2" fixed hole.
(C) 65x120 (WxH), Directly mounted into 2-1/2" fixed hole.
(D) 80x80 (WxH)

E

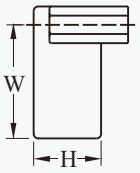

(E) 50x30 (WxH), Suitable for high S.G. raw materials. Use a small size paddle to decrease the impact of material falling directly on paddle.

F

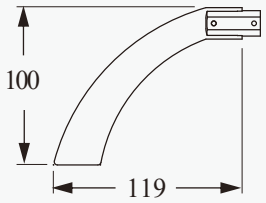

(F) Scimitar model paddle, Screw tightly on the 1" diameter fixed hole, It Is easier to mount and dismount.

MODEL NUMBER / ORDER CODE COMPARISON TABLE

Model Number	Order Code
SE170	SEX300□□-AA
SE171	
SE172	SEX300□□-AB
SE173	SEX300□□-AC
SE174	SEX302□□-AA
SE175	SEX302□□-AB
SE176	SEX302□□-AC
SE177	SEX300□□-AD

ACCESSORIES

Cable Conduit - Ex d IIC

Material: Washer ---NBR
Body--- Copper alloy(3/4"NPT)
Nickel plated(1/2"NPT)

HP415-A23100MH01(29-1104)

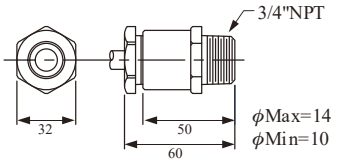

HP415-A23000MG01(29-1108)

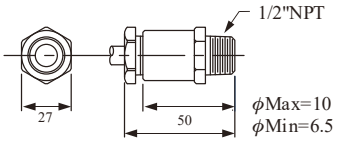

NEW / OLD PADDLE MODEL COMPARISON TABLE

New	Figure		Dimension(WxH)	Old
B	Rectangular shaped type	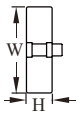	100x30	A
C	Shovel shaped type	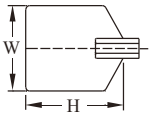	65x80	B
D			65x120	C
E			80x80	D
F	Rectangular type, one sided	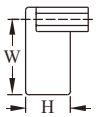	50x30	E
G	Scimitar shaped type	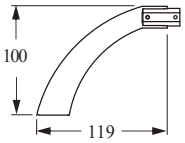	100x119	F
H	Folding type	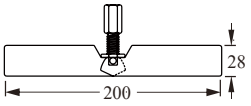	200x28	J
K	Weights type	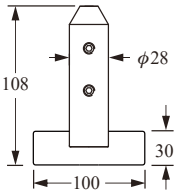	100x108	X

ORDER INFORMATION

⑤⑥ ⑦⑧ ⑩ ⑪ ⑫ ⑬ ⑭ ⑮ ⑯ ⑰ ⑱ ⑲ ⑳ ㉑ ㉒

SEX3 □□□□-A□□□□□□□□□□□□□□

⑤⑥ Model

00: Standard
02: Hi-temperature

⑦⑧ Certification

1C: ATEX-Exd
2C: IECEx-Exd
5C: TS-Exd
7C: NEPSI-Exd

⑩ Construction

A: General type
B: Shaft protective tube type
C: Shaft length adjustable type
D: Cable wire type

⑪ Power supply

A: AC110V
B: AC220V
C: AC240V
D: AC24V

Connection

⑫⑬

Flange item
AK: JIS-FF
AN: ANSI-RF
AS: DIN-FF

Thread item
AA: JIS
AC: ANSI

⑭⑮

A8: 1"
B1: 1-1/2"
B2: 2"
B4: 2-1/2"

⑯⑰

01: PT male
03: PF male
07: NPT male
40: 5 kg/cm^2
42: 10 kg/cm^2
48: 150 Lbs
49: 300 Lbs
57: PN10
58: PN16

⑱ Paddle model

A: None
B: 100x30(WxH)
C: 65x80(WxH)
F: 50x30(WxH)
G: Scimitar type
K: 100x108(WxH)(Cable wire type only)

⑲⑳㉑㉒ Length

Code	Length range
0001~4000	0001~4000mm

MINI TYPE(ALUMINUM ALLOY COVER)

Housing cover code:
0: Aluminum cover
1: Aluminum cover with LED lamp

Power source：(A)110Vac,(B)220Vac,(C)240Vac,
(D)24Vac,50/60Hz,(E)24Vdc
Power consumptio：1.5W
Contact capacity：5A/250Vac, 5A/30Vdc
Rotary speed：1 R.P.M.
IP rating：IP65

Housing material : Aluminum alloy
Ambient temperature : -40°C ~ 85°C
Cable length : 300mm (available for custom length)
Display status : Green(Working), Red(Stopped)
Material density：0.3g/cm³

SE38□0

STANDARD TYPE
Operation Temp.: -40°C ~ 85°C
Paddle material: PC

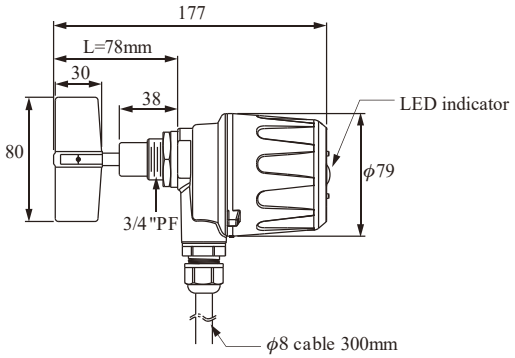

SE38□4

HIGH TEMPERATURE TYPE
Operation Temp.: -40°C ~ 200°C
Paddle material: SUS304

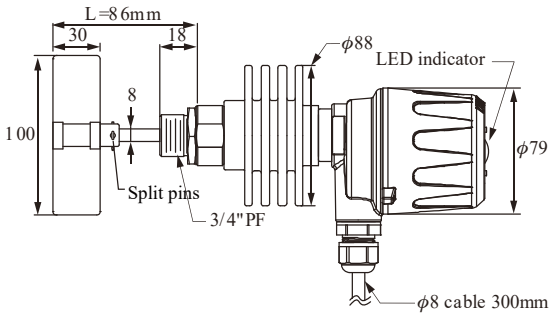

SE38□2

SHAFT PROTECTIVE TUBE TYPE
Operation Temp.: -40°C ~ 85°C
Paddle material: SUS304

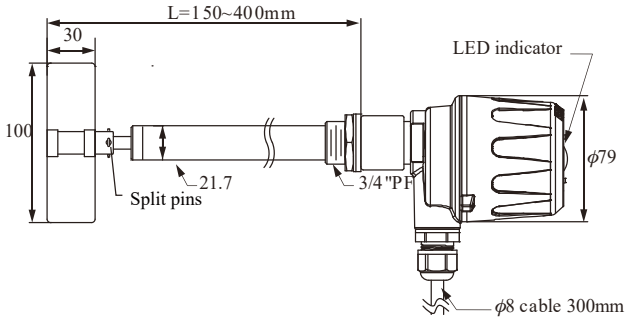

SE38□5

HIGH TEMPERATURE SHAFT PROTECTIVE TUBE TYPE
Operation Temp.: -40°C ~ 200°C
Paddle material: SUS304

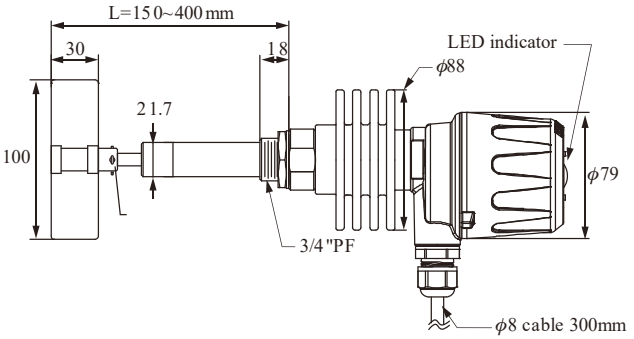

MINI TYPE(EXPLOSION PROOF)

Ex ta/tb IIIC T*Da/Db

Power source：(A)110Vac,(B)220Vac,(C)240Vac,
(D)24Vac,50/60Hz,(E)24Vdc
Power consumptio：1.5W
Contact capacity：5A/250Vac, 5A/30Vdc
Rotary speed：1 R.P.M.
IP rating：IP65

Housing material : Aluminum alloy
Ambient temperature : -40°C ~ 85°C
Cable length : 300mm (available for custom length)
Material density：0.3g/cm³

SE3700

STANDARD TYPE
Operation Temp.: -40°C ~ 80°C
Paddle material: PC

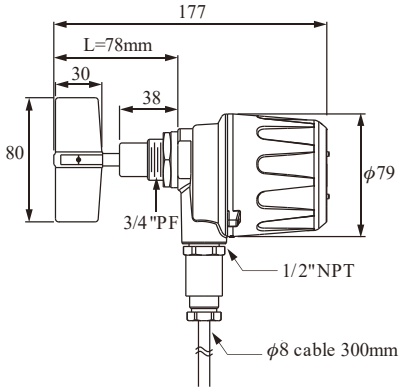

SE3704

HIGH TEMPERATURE TYPE
Operation Temp.: -40°C ~ 195°C
Paddle material: SUS304

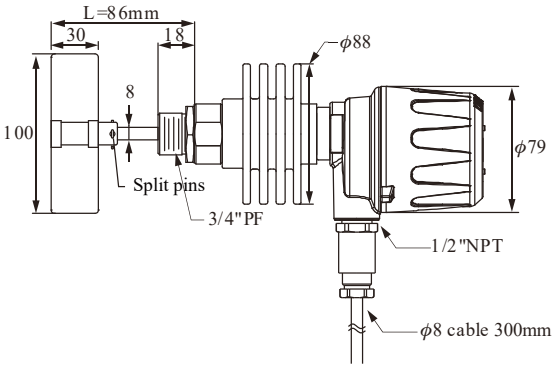

SE3702

SHAFT PROTECTIVE TUBE TYPE
Operation Temp.: -40°C ~ 80°C
Paddle material: SUS304

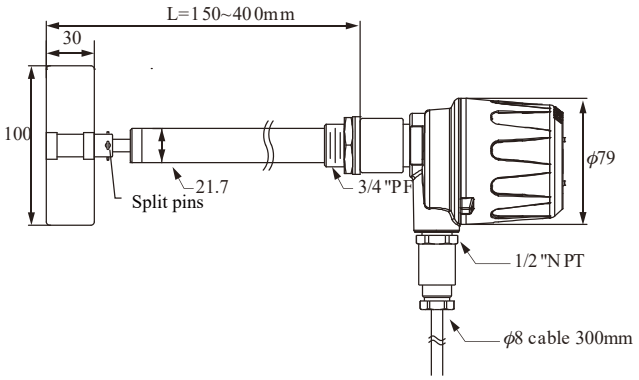

SE3705

HIGH TEMPERATURE SHAFT PROTECTIVE TUBE TYPE
Operation Temp.: -40°C ~ 195°C
Paddle material: SUS304

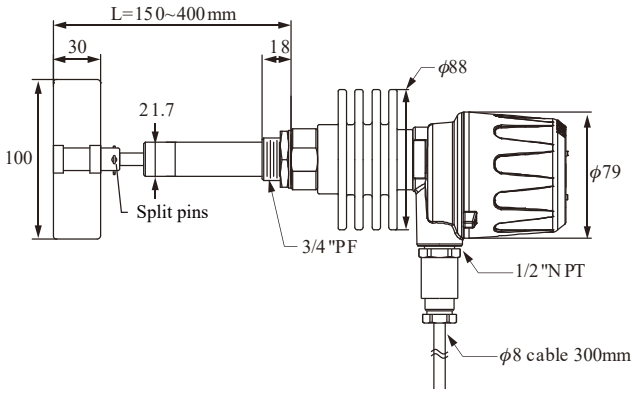

MINI TYPE(PLASTIC COVER)

Power source：(A)110Vac,(B)220Vac,(C)240Vac,
(D)24Vac,50/60Hz,(E)24Vdc
Power consumptio：1.5W
Contact capacity：5A/250Vac, 5A/30Vdc
Rotary speed：1 R.P.M.
IP rating：IP65

Housing material : Plastic cover
Ambient temperature : -40°C ~ 85°C
Cable length : 300mm (available for custom length)
Material density：0.3g/cm³

SE3820

STANDARD TYPE
Operation Temp.: -40°C ~ 85°C
Paddle material: PC

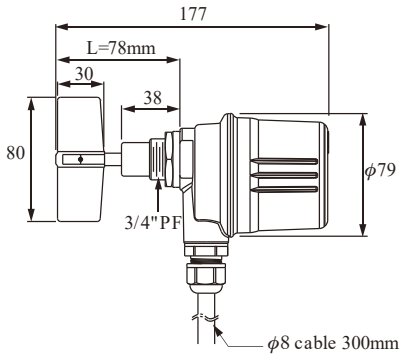

SE3824

HIGH TEMPERATURE TYPE
Operation Temp.: -40°C ~ 200°C
Paddle material: SUS304

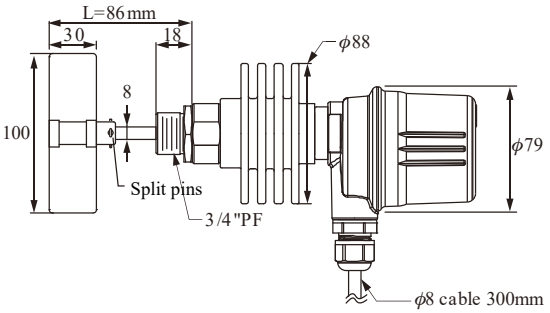

SE3822

SHAFT PROTECTIVE TUBE TYPE
Operation Temp.: -40°C ~ 85°C
Paddle material: SUS304

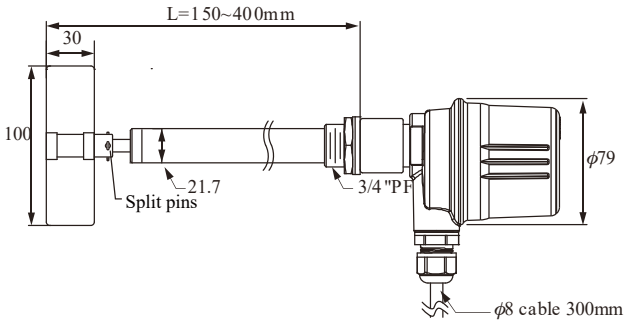

SE3825

HIGH TEMPERATURE SHAFT PROTECTIVE TUBE TYPE
Operation Temp.: -40°C ~ 200°C
Paddle material: SUS304

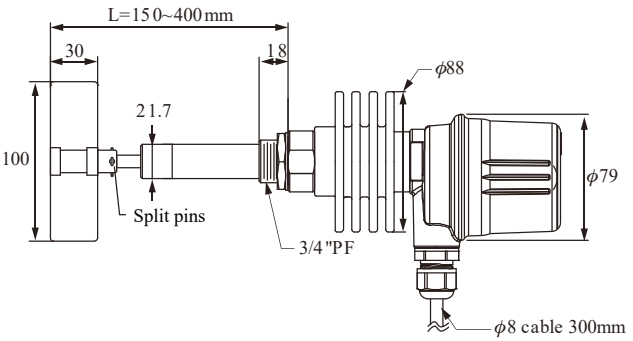

MODEL NUMBER / ORDER CODE COMPARISON TABLE

Model Number	Order Code
SE3700	SEX2007D-AA
SE3702	SEX2007D-AB
SE3704	SEX2027D-AA
SE3705	SEX2027D-AB
SE3800	SEX20000-AA
SE3810	SEX20000-BA
SE3820	SEX20000-CA
SE3802	SEX20000-AB

Model Number	Order Code
SE3812	SEX20000-BB
SE3822	SEX20000-CB
SE3804	SEX20200-AA
SE3814	SEX20200-BA
SE3824	SEX20200-CA
SE3805	SEX20200-AB
SE3815	SEX20200-BB
SE3825	SEX20200-CB

NEW / OLD PADDLE MODEL COMPARISON TABLE

New	Figure		Dimension(WxH)	Old
G	Cross bladed type	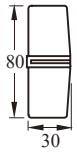	80x30	G
H	Scimitar shaped type	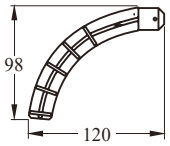	98x120	H
I	Rectangular shaped type	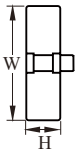	100x30	I
K	Hinged type	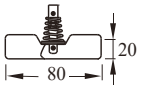	80x20	K

PROBE LENGTH LIST FOR MINI TYPE (WITH DIFFERENT PADDLES)

Paddle model	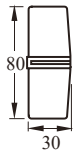	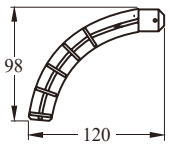	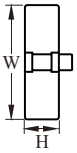	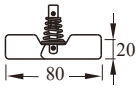
Appearance diagram	Cross bladed type 80x30 (PC)	Scimitar shaped type 98x120 (PC)	Rectangular shaped type 100x30 (SUS)	Hinged type 80x20 (SUS)
SE38□0 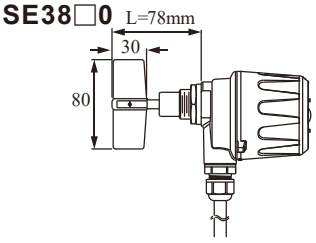	L=78	L=174	L=104	L=100
SE38□4 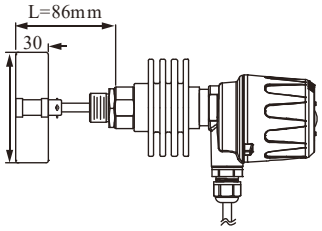	Not suitable for high temperature (> 120°C) Stainless steel paddle suggested		L=86	L=82
SE2□0 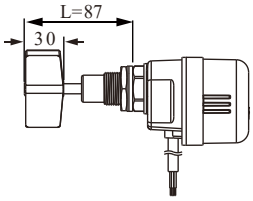	L=87	L=183	L=113	L=109

ORDER INFORMATION

⑤⑥ ⑦ ⑧ ⑨ ⑩ ⑪ ⑫ ⑬ ⑭ ⑮ ⑯ ⑰ ⑱ ⑲ ⑳ ㉑ ㉒ ㉓ ㉔ ㉕ ㉖

SEX2 □□□□-□□□□□□□□□ □□□□□□□□□

⑤⑥ Model

00: Standard
02: Hi-temperature

⑦⑧ Certification

00: None
7D: NEPSI-Exd
(The housing select A:Alumium cover only)

⑨ Housing

A: Aluminum cover
B: Aluminum cover with LED lamp
C: Plastic cover

⑩ Construction

A: General type
B: Shaft protective tube type

⑪ Power supply

A: AC110V
B: AC220V
C: AC240V
D: AC24V
E: DC24V

Connection

⑫⑬

Flange item
AK: JIS-FF
AN: ANSI-RF
AS: DIN-FF

Thread item
AA: JIS
AC: ANSI

⑭⑮

A7: 3/4"
A8: 1"
B1: 1-1/2"
B2: 2"
B4: 2-1/2"

⑯⑰

01: PT male
03: PF male
07: NPT male
40: 5 kg/cm^2
42: 10 kg/cm^2
48: 150 Lbs
49: 300 Lbs
57: PN10
58: PN16

(Next page)

ORDER INFORMATION

⑱ Paddle model

A: None
G: PC; Cross type
H: PC; Scimitar type 120x98(WxH)
I: SUS; 100x30(WxH)
K: SUS; Folding type 80x20(WxH)

⑲⑳㉑㉒ Length

Code	Length range
0001~400	0001~400mm

㉓㉔㉕㉖ Cable wire length

Code	Length range
0300~5000	0300~5000mm

MINI TYPE(ECONOMY)

Power source：(A)110Vac,(B)220Vac,
(D)24Vac,50/60Hz,(E)24Vdc
Power consumptio：1.5W
Contact capacity：3A/250Vac, 3A/30Vdc
Rotary speed：1 R.P.M.
IP rating：IP65

Housing material : Plastic cover
Ambient temperature : -20°C ~ 80°C
Cable length : >300mm (available for custom length)
Material density：0.3g/cm³

SE290

STANDARD TYPE
Operation Temp.: -20°C ~ 80°C
Paddle material: PC

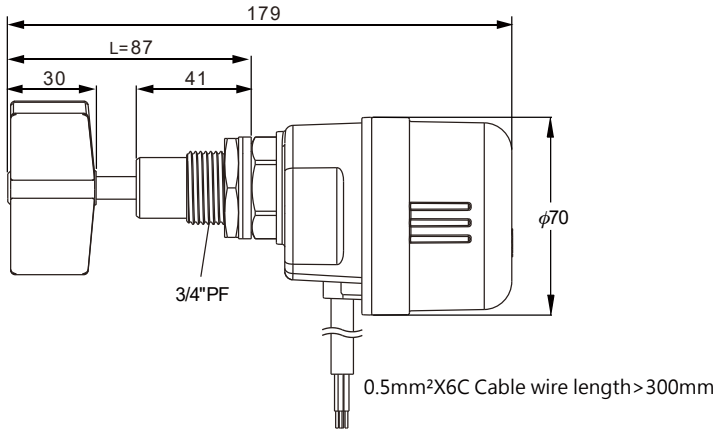

MODEL NUMBER / ORDER CODE COMPARISON TABLE

Model Number	Order Code
SE290A	SEX40000-CAA
SE290B	SEX40000-CAB
SE290D	SEX40000-CAD
SE290E	SEX40000-CAE

ORDER INFORMATION

⑪ ⑫ ⑬ ⑭ ⑮ ⑯ ⑰ ⑱ ⑲ ⑳ ㉑ ㉒

SEX4 0 0 0 0 - C A □□□□□□□□□□□□

⑪ Power supply

A: AC110V
B: AC220V
D: AC24V
E: DC24V

Connection

⑫⑬

Flange item
AK: JIS-FF
AN: ANSI-RF
AS: DIN-FF

Thread item
AA: JIS
AC: ANSI

⑭⑮

A7: 3/4 "
A8: 1"
B1: 1-1/2"
B2: 2"

⑯⑰

01: PT male
03: PF male
07: NPT male
40: 5 kg/cm^2
42: 10 kg/cm^2
48: 150 Lbs
49: 300 Lbs
57: PN10
58: PN16

⑱ Paddle model

A: None
G: PC; Cross type
H: PC; Scimitar type 120x98(WxH)
I: SUS; 100x30(WxH)
K: SUS; Folding type 80x20(WxH)

⑲⑳㉑㉒ Cable wire length

Code	Length range
0300~5000	0300~5000mm

MOUNTING EXAMPLES

Regular models such as the SE11should be installed directly on the tank side.
Mount at a 35° angle the blade through the tank opening or hole sliding the blade in first.

※ The SE170 series minimum hole size should be 95mm in diameter.
The scimitar model is directly installed on the tank wall method as shown below.
(Assuming an arc-shaped tank with a 3/4 "connection) and then screwing it tight.

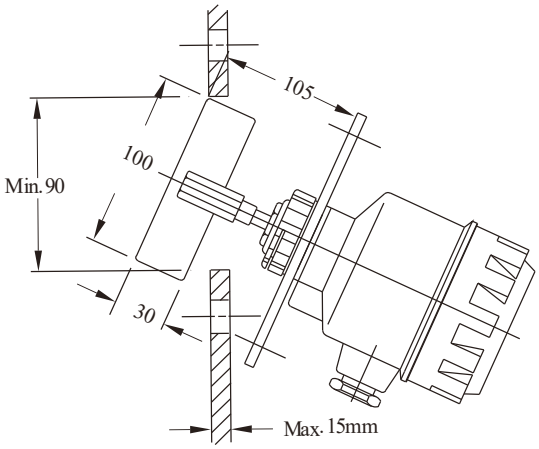

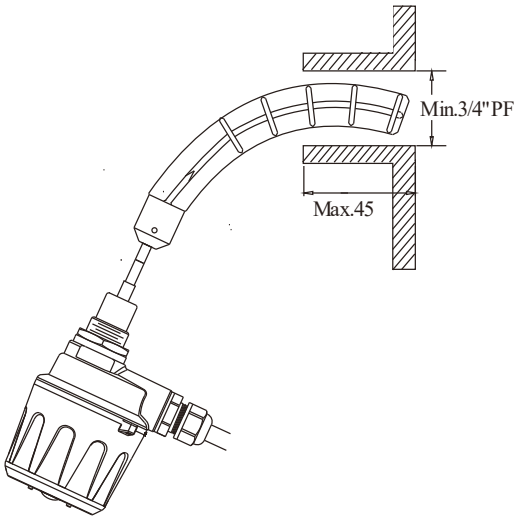

INJECTION MOLDING MACHINES

Injection Molding Machine usually require the SE38.
Install the Rotary Paddle through a 20mm diameter hole on the tank/silo.
Remove the paddle from the device by taking out the fastening pin.
Insert the SE38 through the mounting hole and tighten it.
After which, secure the Paddle to the SE38 by locking it to the shaft with the pin.
Keep in mind to 'widen' the opening of the pin in order to secure it.

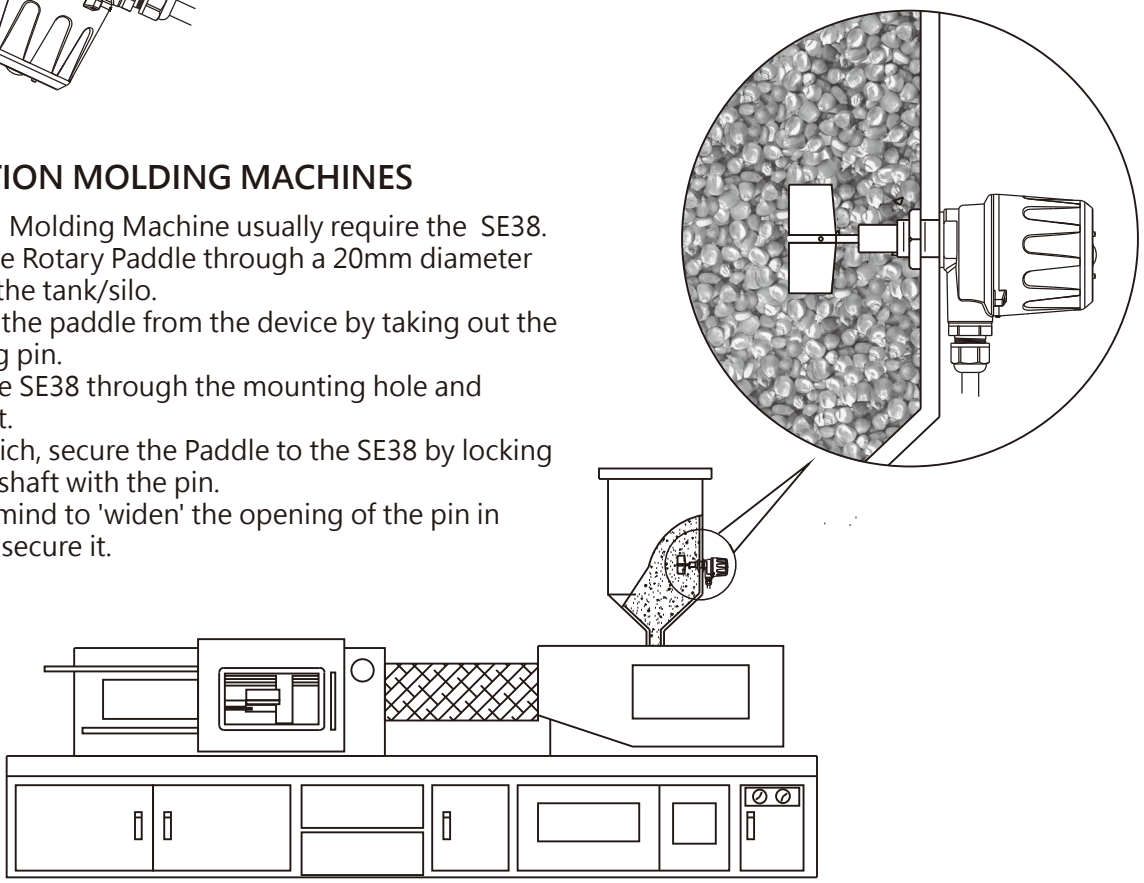

EXAMPLES

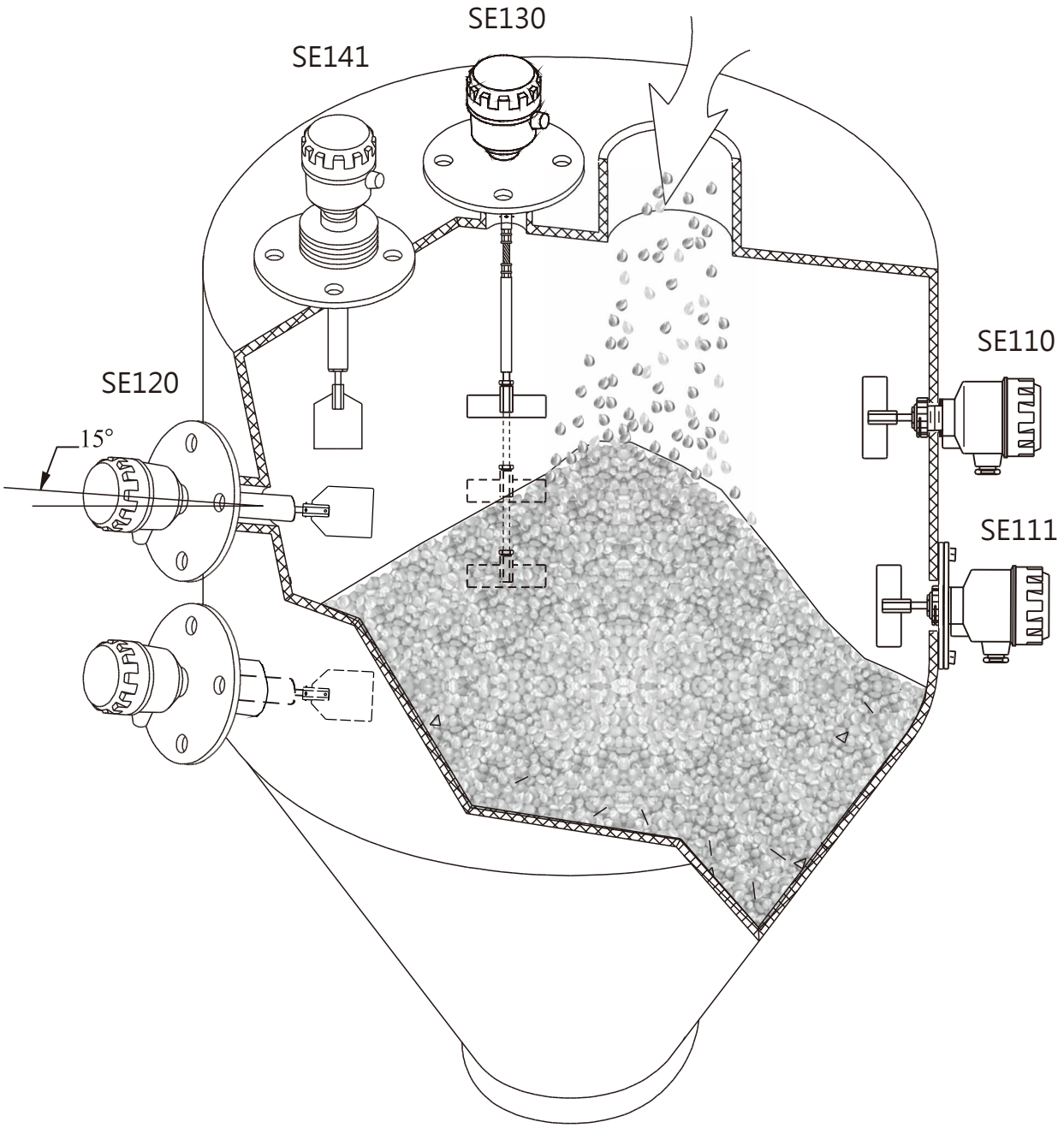

INSTALLATION NOTICESEXAMPLES

1. Side mount the sensor at a downward angle of 15° ~20° to decrease the material inflow impact.
2. For high temperature application (more than 70°C), please use the SE149 Series.
3. For SE110~SE140 using a 1" inlet, please apply the scimitar model and screw directly.
4. For SE130, SE146 series have flexible and extendible shafts.
5. Please ensure the lead wire enters the housing from the bottom and the nuts are fastened to secure the device.

Global Network

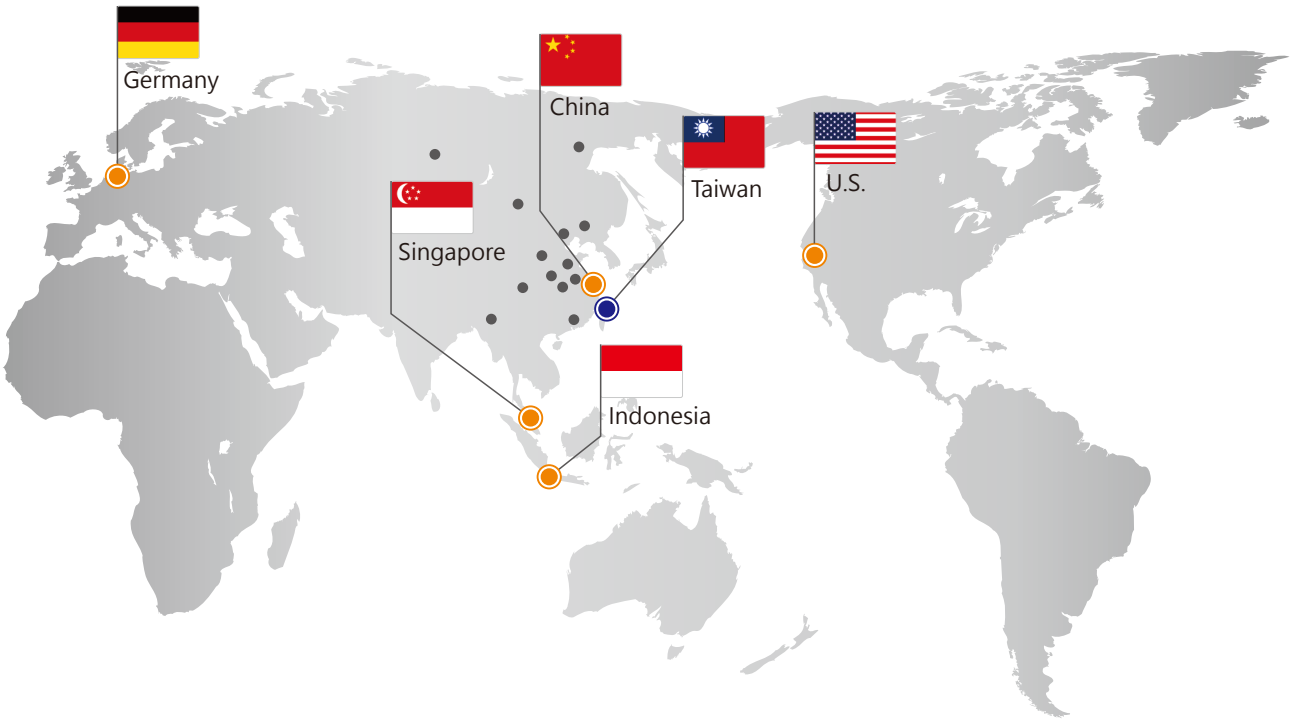

Head Quarter

Taiwan
FineTek Co., Ltd. - Taipei Head Quarter
No.16, Tzuchiang St., Tucheng Industrial Park
New Taipei City 236, Taiwan
TEL: 886-2-2269-6789
FAX: 886-2-2268-6682
EMAIL: info@fine-tek.com

North America

California, U.S.
Aplus Finetek Sensor Inc. - US Office
355 S. Lemon Ave, Suite D
Walnut, CA 91789
TEL: 1 909 598 2488
FAX: 1 909 598 3188
EMAIL: info@aplusfine.com

Europe

Germany
FineTek GmbH - Germany Office
Bei den Kämpen 26
21220 Seevetal-Ramelsloh, Germany
TEL: +49-(0)4185-8083-12
FAX: +49-(0)4185-8083-80
EMAIL: info@fine-tek.de

Mütec Instruments GmbH - Germany Office
Bei den Kämpen 26
21220 Seevetal-Ramelsloh, Germany
TEL: +49-(0)4185-8083-0
FAX: +49-(0)4185-8083-80
EMAIL: muetec@muetec.de

Asia

China
Fine automation Co., Ltd. - Shanghai Factory
No.451 DuHui Rd, MinHang District, Shanghai,
China 201109
TEL: 86-21-6490-7260
EMAIL: info.sh@fine-tek.com

Singapore
FineTek Pte Ltd. - Singapore Office
37 Kaki Bukit Place, Level 4 Singapore 416215
TEL: 65-6452-6340
EMAIL: info.sg@fine-tek.com

Indonesia
PT. FineTek Automation Indonesia - Indonesia Office
PERGUDANGAN TUNAS BITUNG
JL. Raya Serang KM. 13,8, Blok C3 No. 12&15,
Bitung Cikupa, Tangerang 15710
TEL: 62 (021)-2958-1688
EMAIL: info.id@fine-tek.com

FineTek

Distributor:

08-SEXEP-0902